TitanEX™

MLP778-605 and MLP778-606
Selection Valve, 10 Position/11 Port

Description

The MLP778-605 and MLP778-606 are low pressure, 10-position, 11-port motorized selection valves that include a circuit board. Model MLP778-605 accepts 1/16” tubing and model MLP778-606 accepts 1/8” tubing. The design of these valves provides a small footprint. A unique patented* Tubing Connection System eliminates the need for the threaded nuts and ferrules for tubing retention and liquid sealing.



Flow Diagram:
The flow switching pattern of the valve is shown below. The circles represent the ports in the valve ram and stator. The dark groove represents the connecting passage in the rotor seal.



Specifications

- **Liquid Contacts:** RPC-7
- **Connections:** MLP777-605 accepts 1/16” OD tubing directly into the valve; MLP778-606 accepts 1/8” OD tubing directly into the valve.
- **Flow Passage Diameters:** 1.0-mm (.040")
- **Port-to-Port Volume:** 19.8µL
- **Operating Pressure:** Maximum pressure 9 bar (125 psi, 0.9 MPa)
- **Operating Humidity:** <95% humidity, non-condensing
- **Shipping and Storage Temperature:** Shipping, storing or operating this valve below 0°C with water in the fluid passages may cause failure of the sealing surfaces.
- **Regulatory REACH and RoHS Compliant**: Yes

IDEX HEALTH & SCIENCE

For ordering, technical support, and contact information please visit www.idex-hs.com

Dimensional l Drawings
Dimensions are in inches [millimeters]
For Reference Only

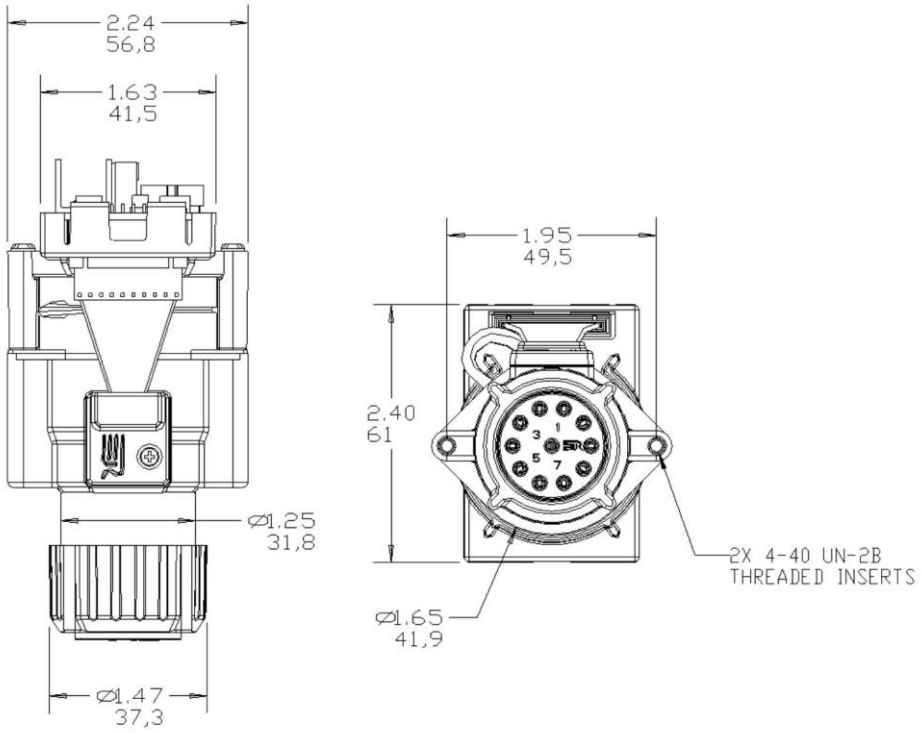

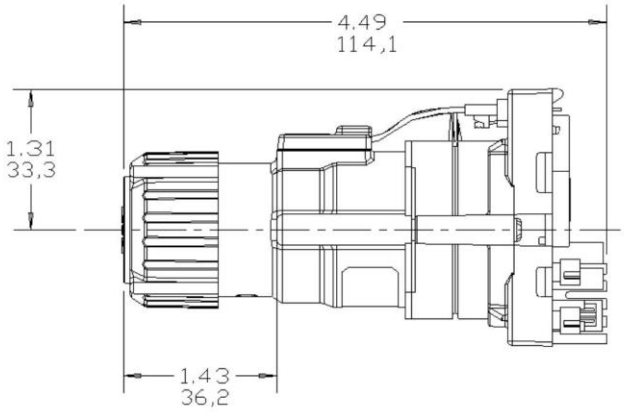

* Model MLP778-605 includes 1/16 o-rings at the base of the stator ports

IDEX HEALTH & SCIENCE

For ordering, technical support, and contact information please visit www.idex-hs.com