TitanEZ™

EZ1213-820-4
Selection Valve, 12 Positions/13 port

Description

The EZ1213-820-4 is a 12-position, 13-port ceramic-on-ceramic motorized valve. The valve has a Ultra-High Molecular Weight Polyethylene (UHMWPE) stator with a FFKM gasket that insures a leak free seal between the UHMWPE and ceramic surfaces. Included with the valve is a Motor Driver/Valve Controller Board programmed for 4-line BCD control. The valve has a small footprint and is capable of millions of actuations due to the ceramic-on-ceramic dynamic surfaces. Included are two 4-40 x 5/16" long mounting screws and fittings for 1/8" OD tubing.



Flow Diagram:
The flow switching pattern is shown to the right. Please note that this is a representation of the flow path and may not show the true position of the ports and grooves.

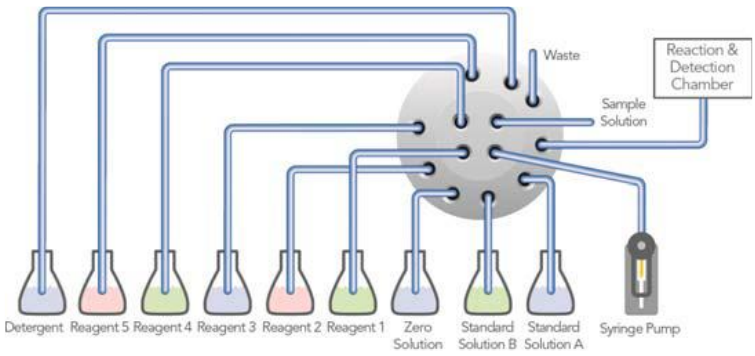

Specifications

- **Liquid Contacts:** TZP Ceramic with proprietary coating, UHMWPE, and FFKM
- **Connections:** Accepts ¼-28 male threaded fittings for flat-bottom ports
- **Flow Passage Diameters:** Stator: 0.040" (1mm); Stator Face: 0.040" (1mm); Rotor Seal: 0.040" (1mm)
- **Port-to-Port Volume:** 24.5µL
- **Operating Pressure:** Maximum pressure 5.2 bar (75 psi, 0.51 MPa)
- **Operating Humidity:** <95% humidity, non-condensing
- **Shipping and Storage Temperature:** Shipping, storing or operating this valve below 0°C with water in the fluid passages may cause failure of the sealing surfaces.
- **Regulatory REACH and RoHS Compliance Information**: Yes

IDEX HEALTH & SCIENCE

For ordering, technical support, and contact information please visit www.idex-hs.com

Dimensional l Drawings
Dimensions are in inches [millimeters]
For Reference Only

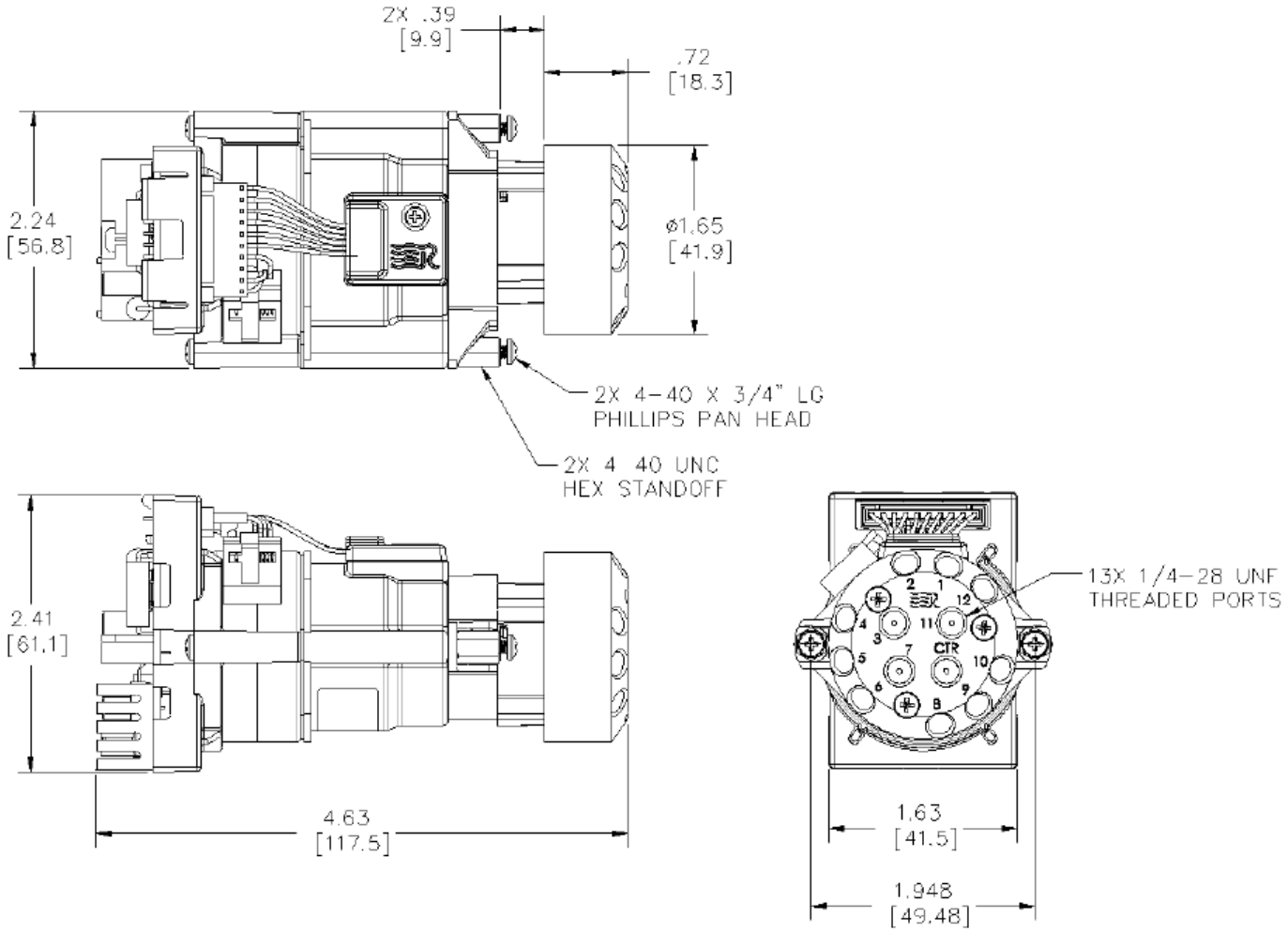

IDEX HEALTH & SCIENCE

For ordering, technical support, and contact information please visit www.idex-hs.com