Introduction to Opto-Mechanical Hardware

7

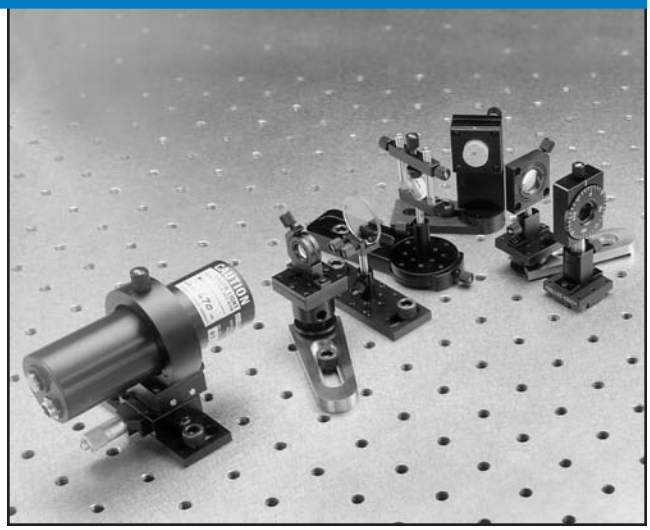

Introduction	**7.2**
Positioning Performance and Accuracy	**7.3**
Choosing the Right Mount	**7.6**
Opto-Mechanical Hardware Types	**7.8**
Sources of Error	**7.14**
Material Properties and Selection	**7.15**

Introduction

The performance of an optical system, as well as the overall cost of the system, depends upon choosing the right components. To set up a complex optical laboratory successfully or to conduct an engineering project, it is important to have a fundamental understanding of the various opto-mechanical positioning devices available to the optical experimentalist.

Before selecting an opto-mechanical hardware component for an application, there are three things to consider: the required level of performance, the number of degrees of freedom required, and component design and construction.

Level of Performance: It is very important to determine the level of performance and the degree of precision appropriate for the application. If an experiment requires alignment with precision of only 1 μm, purchasing a positioning system with the ability to resolve 1 nm will not be cost effective. On the other hand, if the application is aligning single-mode fiber optics, nanometric precision could be highly necessary or highly beneficial.

Degrees of Freedom: The number and types of opto-mechanical positioners required for an application is directly related to the degrees of freedom that are required to align accurately different objects, with specific properties, to one another. For example, if a laser diode is being aligned to an optical fiber, it might be sufficient to keep the laser diode fixed in place and move the tip of the optical fiber in three orthogonal directions: x, y, and z. If this is the case, and the system is not sensitive to angular misalignments, a single precision x-y-z stage equipped with micrometers should do the job. However, in an application sensitive to angular misalignments, it would be necessary to include a stage with θy (pitch) and θz (yaw) adjustments in order to have enough degrees of freedom to perform the alignment. When coupling two polarization-maintaining fibers, an additional degree of freedom is required because the orientation of the birefringent axes of the fibers must match. Consequently, one of the stages holding the fibers must be capable of being adjusted for θx (roll). This can be accomplished by adding a separate roll stage to an x-y-z stage. In general, the greater the capability is, the greater the complexity of the opto-mechanical device and the greater the risk of instability. It is therefore critical to include only those degrees of freedom that are absolutely necessary.

Component Design and Construction: The design of the mechanism in a positioner can significantly affect its stability, accuracy, repeatability, and ease of use in a system. A high-toleranced ball-bearing rotary mechanism, for example, is typically more stable and repeatable than one made from a pin and bushing. Wear and tear are functions of the type of materials from which the mechanism is made. A steel mechanism is typically more durable than one made of a softer material such as aluminum. Opto-mechanical components come in a variety of styles, each designed to meet the requirements of certain types of experiments. Not every experiment, however, has requirements that would justify the higher cost of more durable and precise positioners, and it is important to choose the type of component that is right for its intended purpose.

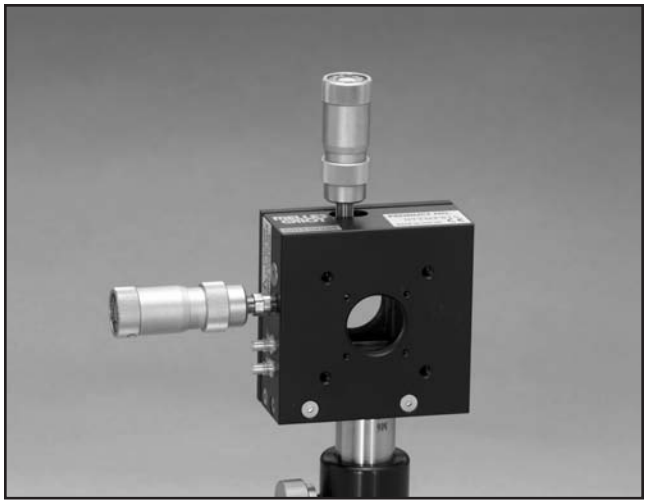

High-resolution opto-mechanical positioners use flexure bearings.

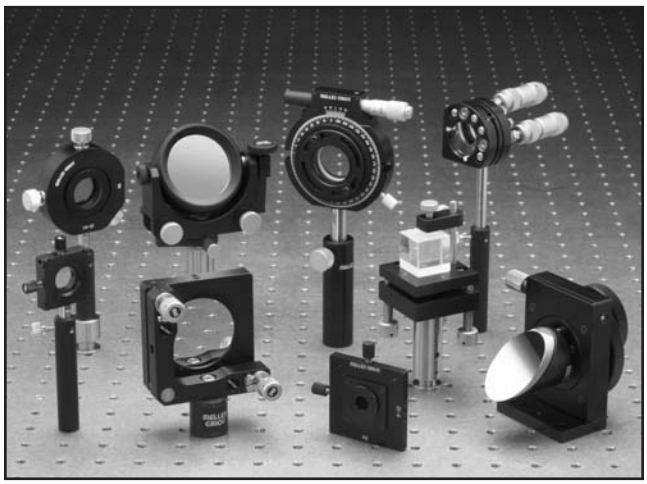

Opto-mechanical components are designed to position in one or more degrees of freedom.

Positioning Performance and Accuracy

DEGREES OF FREEDOM IN POSITIONING DEVICES

A degree of freedom is defined as movement that is used to position an object in a specific direction of motion. In a three-dimensional space, there are six degrees of freedom. In the Cartesian coordinate system, there are three linear degrees of freedom (x, y, and z), which correspond to the coordinate axes, and three rotational degrees of freedom (θx, θy, and θz), which correspond to the rotation about each of the coordinate axes (see figure 7.1).

Optical component positioning tools are designed to offer the capability of adjustment in one or more specific degrees of freedom. For example, a one-axis opto-mechanical mount or positioning device is designed to provide only one direction of motion and constrain motion in all other axes. Vertical stages could be used for applications in which it is necessary to adjust the height of an optical component with respect to the surface plane of the optical table. For applications in which angular motion is necessary (e.g., adjusting the orientation of the optical axis), it would be necessary to use opto-mechanical component stages with a tilt adjustment capability. For applications requiring a purely angular adjustment, the suitable types of opto-mechanical positioning devices would be rotary mounts and stages or goniometers. Opto-mechanical components used for positioning are available with varying levels of complexity, ranging from single-axis devices with only one degree of freedom to multiaxis systems with up to six orthogonal degrees of freedom. It is also possible to stack several single-degree-of-freedom components to obtain motion capability along several axes; however, the degree of precision and stability provided by the stack of components will be inferior to that of each of its individual building blocks.

KEY ALIGNMENT PARAMETERS

Resolution

Resolution is the smallest increment of motion any particular positioner can provide. On a majority of positioners, motion is controlled by actuators, such as thumbscrews or micrometers, which convert rotational motion into linear motion. The ultimate resolution of motion is determined by the effective pitch of the threads on the actuator, the stiction of the device, and the ability of the operator to adjust the device repeatably. In general, thumbscrews with large-diameter knobs have greater resolution than those with small-diameter knobs, and the higher the thread density, the higher the resolution. In specifications, resolution is based on the ability of a reasonably knowledgeable and moderately skilled operator to make adjustments routinely, typically from one to five degrees of actuator rotation.

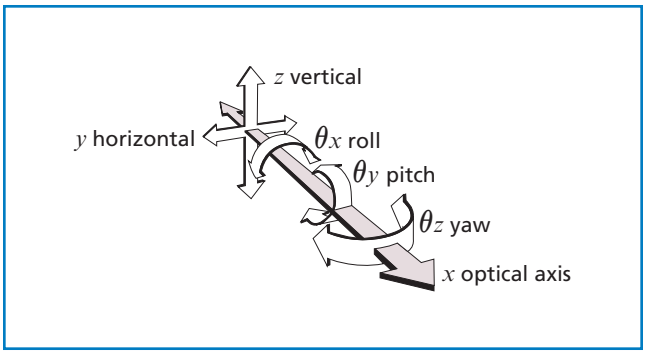

Figure 7.1 **Six degrees of freedom: x, y, z and θx, θy, θz**

In the case of motorized positioning systems which perform the positioning function in an automated fashion, it is typically the mechanical configuration of the driver hardware that establishes the degree of resolution. In stepper-motor mechanisms the motion of the positioner can be made only in integer multiples of the predefined amount of resolution. For example, a stepper motor and stage combination with a resolution of 5 μm could move an object only to a location that is an integer multiple of 5 μm away from its starting reference point (e.g., a distance of 5, 10, 15, 20 μm . . .). In such a system, it would not be possible to move the object to a point 14 or 53 microns away from its current position.

Repeatability

Repeatability is the error within which a given position can be reproduced. Unidirectional repeatability, measured by approaching a position from a single direction, hides errors caused by backlash effects. Bidirectional repeatability, measured by approaching a position from opposing directions, includes these effects and provides a more meaningful specification.

Accuracy

Accuracy is the absolute deviation between desired and actual position. It is usually associated only with the axis or axes of intended travel of the opto-mechanical positioning tool.

Abbé Error

The linear positional error caused by the combination of the axes of measurement being offset from the plane of motion, as well as an angular error in that motion, is referred to as the Abbé error. The Abbé error has the worst impact on linear positioning accuracy. The Abbé error increases as the distance between stage bearings and the mounted component increases. This might occur, for example, with post-mounted components on a stage. An angular error in θy (pitch) of a stage will result in a positional error in y and an axis shift in z of a post-mounted component. Sources of Abbé error include way curvature, preload variation along a way, insufficient preload or backlash, contamination between the bearings and way surfaces, and torsional compliance caused by external forces acting on the load and overhanging components. The Abbé error can be minimized by keeping the axis of measurement as close to the plane of motion as possible. The Abbé error for a post-mounted component is illustrated in figure 7.2.

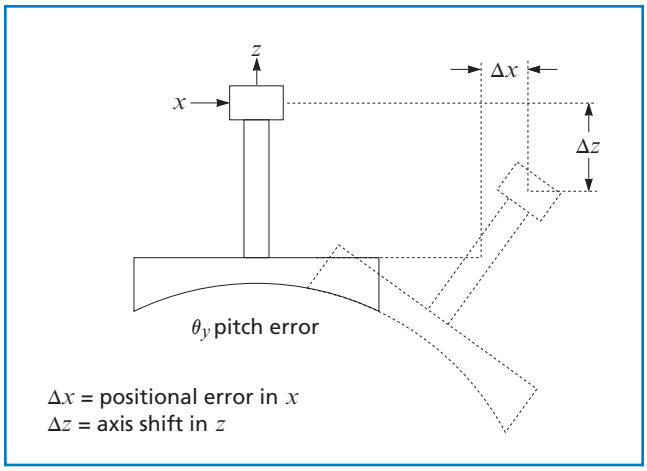

Figure 7.2 **Abbé error of a post-mounted component**

Cosine Error

Cosine error results from an angular misalignment between the motion of the translation stage and that of the actuator (or other accuracy-determining component). The magnitude of the error, equal to the actuator travel times (1-cosß) where ß is the actuator misalignment, has a negligible effect on the overall accuracy of the stage. For example, if a translation stage with 25 mm of travel has an actuator with a one-degree misalignment, this results in an error of just 3.8 µm over the entire range of travel.

Other Sources of Error

Other errors commonly associated with performance limitations of optical positioners include straightness of travel, angular deviation, wobble, and eccentricity.

When an opto-mechanical positioning component is moved along its intended direction of motion (for example, along the x-axis), it also tends to move along the y- and z-axes. The specification for this undesirable movement is called *straightness of travel* if the motion is horizontal (y) motion and *flatness* if the motion is vertical. In both cases it is defined as the maximum deviation that can occur in the undesired axis over the full length of travel in the intended axis (see figure 7.3).

Angular deviation is a measure of the unintended changes in the angle of the component platform of a linear stage as it travels over its full path length. Angular deviation can occur in any of the three angular degrees of freedom (θx, θy, θz).

In rotary opto-mechanical component mounts and positioning tools, in which angular adjustments are made to the object, two commonly encountered sources of error are *wobble* and *eccentricity*. These unintentionally induced movements occur along the angular and linear directions of motion. Wobble is a measure of the unintentional tilting of the axis about

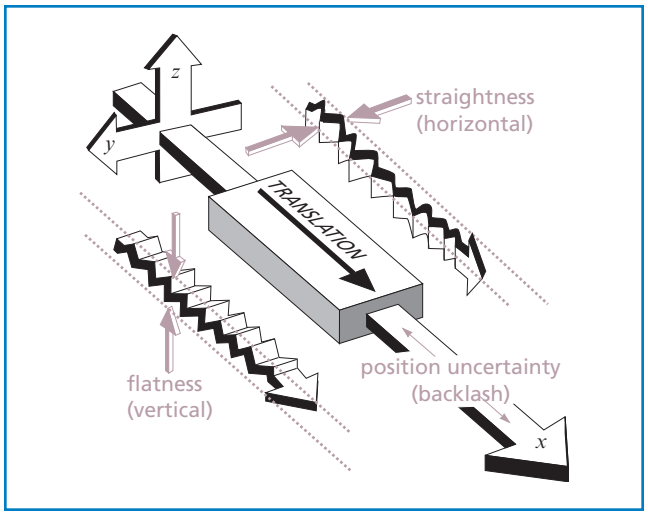

Figure 7.3 **Flatness and straightness of travel are sources of error in linear motion**

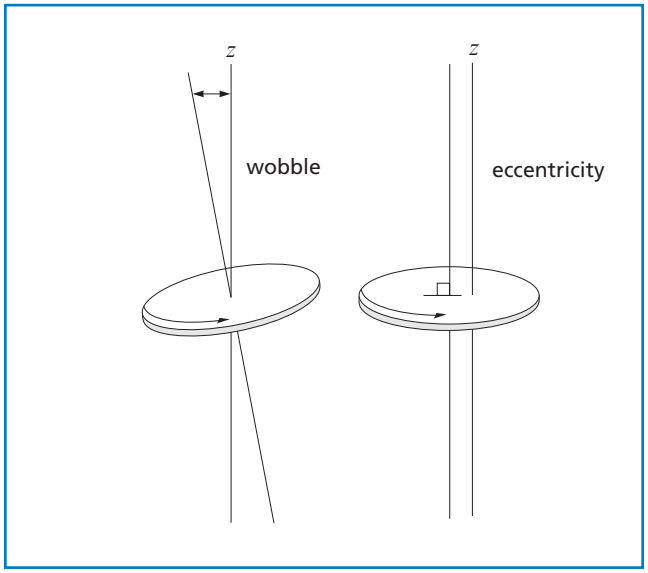

Figure 7.4 **Wobble and eccentricity associated with rotational motion**

which the positioner is rotating. This in turn gives rise to a related error called eccentricity. A schematic representation of this concept is shown in figure 7.4.

COMMON ALIGNMENT SCENARIOS

Alignment is a term used to describe specific adjustment and optimization in experimental optics. Common optical alignment problems (see figure 7.5), which are encountered in an optical laboratory, include the alignment of an axis to a fixed point, the alignment of a point to a fixed axis, and the alignment of two axes, one to another.

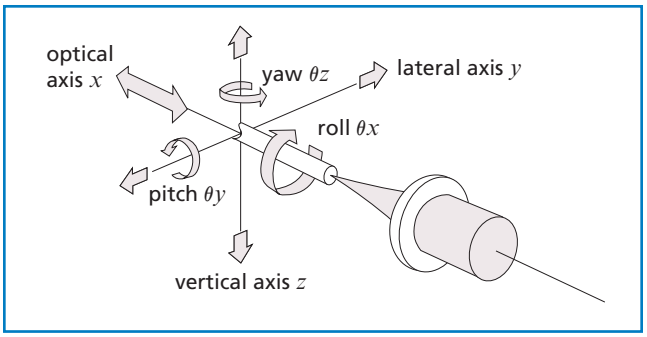

Figure 7.5 **A common alignment scenario**

Aligning a Laser Beam to a Detector

This is a common example of aligning an axis (the beam) to a fixed point (the detector). In most cases, this requires either adjustment in two linear directions or adjustments in two angular directions. However, if the angular adjustment is about the axis of the linear translation (e.g., y and θy), it is possible to accomplish the alignment with a single linear and, single angular adjustment.

Aligning a Ball Lens to a Laser Beam

In the case of aligning a point (the ball lens) to an axis (the beam), linear adjustment is required in two orthogonal directions (x and y). If the beam is highly divergent, an adjustment in the z axis may also be required.

Aligning a Collimator to a Laser

In aligning two axes, the laser beam and the optical axis of the collimator, adjustments in two linear and two angular directions are required. Because any angular adjustment of an axis simultaneously produces a linear translation, this type of alignment procedure is the most demanding. To achieve proper alignment, one must first use angular adjustments to make the axes parallel and then use linear adjustments to make the axes collinear. Adding an additional adjustment capability parallel to the optical axis provides focusing capability as well as axial alignment capability.

More complex alignment problems require more degrees of freedom. In many cases a single type of positioner cannot fulfill all the requirements of a specific alignment application. For example, the focusing mechanism of a lens may require both a long travel range and high resolution in the same axis. Because high-resolution positioning mechanisms typically have a relatively short range of motion, two stages may be required, one for coarse adjustment over a relatively long travel range and for fine adjustment over a short distance.

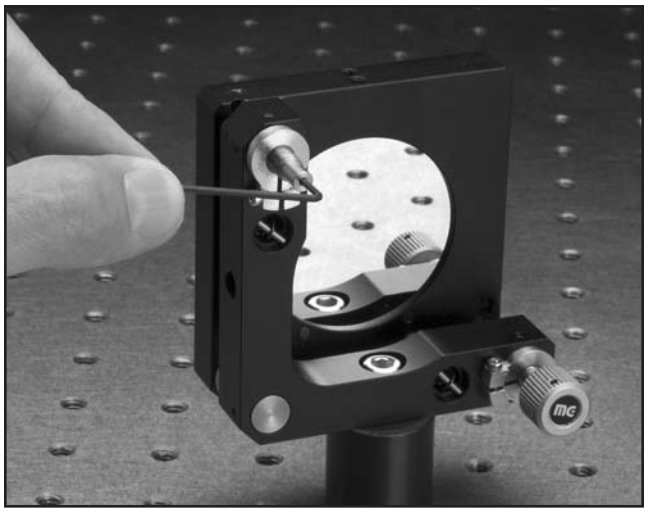

High-resolution adjustments frequently require the use of a lever-arm tool such as an Allen wrench.

Choosing the Right Mount

There are many designs and styles of opto-mechanical components. The components vary widely in their level of complexity, operating specifications, and cost, primarily as a function of their features and performance. Consequently, when choosing the appropriate pieces of hardware for a specific application or experiment, one needs to consider the basic essentials required by the application and to understand the fundamental properties and characteristics of each type of component. The following paragraphs describe the fundamental functionality and design considerations of a variety of opto-mechanical components, with an emphasis on mirror mounts, lens holders, and similar hardware.

THE OPTICAL AXIS—THE VIRTUAL LINE OF REFERENCE

An experimental optical setup can often be quite complex with numerous optical elements and components lined up on an optical table or breadboard. When setting up a complex (or even a simple) optical train, it is necessary to have an absolute line of reference to which all components can be positioned and aligned. This virtual reference line is known as the *optical axis*. On an optical table, the optical axis could be defined as an imaginary line, positioned at a predetermined height above the optical table, parallel to a row of holes on the table. One hole could be chosen as the zero point from which all location coordinates are measured.

Typically, the first optical elements placed in an experimental setup and aligned to the optical axis are mirrors, beamsplitters, prisms, and similar elements which shift or change the direction of the optical beam. In experiments using visible lasers, a typical approach is to use two pinhole apertures as an alignment tool. The pinholes are placed exactly on the optical axis, several centimeters apart. To facilitate positioning, each pinhole is usually mounted on a simple y-z translation stage with micrometer drives which are used to move the pinhole aperture along the two axes perpendicular to the direction of the optical axis. The two pinholes physically define the height and direction of the optical axis. By steering the laser beam so that it passes through both pinholes the laser is aligned to the optical axis. (Instead of pinholes, experimentalists sometimes use crosshair targets.)

The second set of optical elements to be added to the setup and aligned are components with refractive properties. These include lenses, which are first placed in lens holders and are then inserted into the experimental setup and aligned. For different applications or different experiments, the exact method for aligning the lenses to the optical axis varies depending on such things as the nature of the experiment, the degree of positioning precision required, the degree of precision required for the measurement of the optical characteristics, and the properties of the lenses themselves (e.g., paraxial focal length). When aligning lenses to the optical axis in an experiment in which a laser beam is present, pinhole apertures are once again a useful tool. As the laser beam passes through the pinhole, proper alignment can be determined by observing the shape of the focused spot and by observing the position of the back-reflections.

When discussing an optical system, it is customary to define the optical axis as the z axis. In this manner the y axis would be the vertical axis which typically is along the direction that is perpendicular to the surface plane of the optical table. The x axis is thus the horizontal axis which typically is parallel to the surface of the optical table. Discussing an optical axis that is parallel to the optical table can cause some confusion because the convention for mechanical translation stages is that x and y motion are parallel to the table and the z-axis is vertical. For purposes of consistency in this discussion, x will be used for the optical axis.

In order to construct an experimental setup properly on an optical table, the individual optical components must be placed in mounts which have the ability to adjust the components precisely with respect to the optical axis and with respect to the various other components. Mirrors, beamsplitters, and filters fall into the category considered flat components. When aligning this type of flat component to the optical axis, it is usually only necessary to make angular adjustments along the θy and θz directions. In the case of elements such as lenses, misalignment can cause an angular deviation of the light beam. Adjustments in θy and θz are often necessary in order to avoid distortion of the optical beam caused by the lens being tilted; however, the primary adjustment requirement is usually linear in the axes perpendicular to the optical axis (y and z).

MOUNTING LENSES USING SIMPLE POSTS

In an optical laboratory, lenses are often mounted on top of cylindrical posts. The post can be raised and it can be rotated within a post holder. In this fashion the position of the lens can be easily, albeit coarsely, adjusted in both z and θz. The motion of the lens is constrained in the y and θy directions. Mounting the post on top of a base plate with slotted holes makes it possible to make coarse adjustments in the y axis. If the base plate is, in turn, mounted on top of a translation stage, the adjustment in the y axis can be controlled with greater precision.

Adjustments in the θy direction require the use of additional and more complex hardware and mounts. Consequently, the goal of a good-quality lens holder is that the optical axis of a lens mounted in the holder be precisely perpendicular to the vertical axis of the post. Meeting this goal is a function of both how the holder grips the lens and the *centration* of the lens mounted in the holder.

Centration

A lens has two axes: an optical axis and a mechanical axis. For a plano-convex or plano-concave lens one flat surface and one curved surface, the optical axis is defined as the line perpendicular to the flat surface of the lens that also passes through the center of curvature of the curved surface of the lens. For a biconvex, biconcave, or concave-convex lens with two curved surfaces, the optical axis of the lens is defined as the line that passes through the centers of curvature of both surfaces.

The mechanical axis of a lens is defined as the geometrical axis of the virtual cylinder which is formed by the edge of the lens. The measure of separation between the optical axis of the lens and the mechanical axis of the lens is commonly referred to as the *centration error*. Figure 7.6 shows a schematic representation of an asymmetrical, biconvex lens with curved surfaces having different radiuses of curvature.

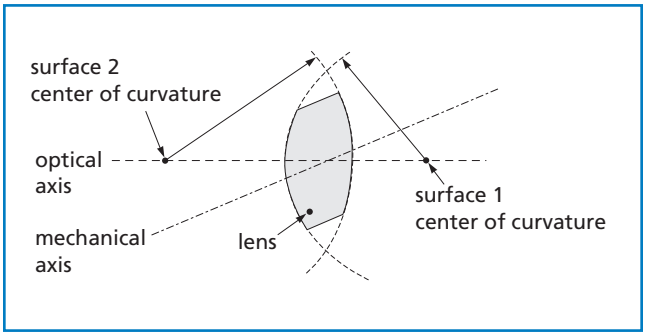

Figure 7.6 **Schematic representation of an asymmetrical, biconvex lens with two curved surfaces. The lens system is said to be suffering from centration error when the mechanical axis of the lens and its optical axis do not coincide.**

Because of this issue of centration it is important that lenses are mounted in lens holders in a way that minimizes the offset between the optical axis of the lens and the optical axis of the experimental setup as a whole. Figure 7.7 shows two different mechanisms for holding a lens. In the edge-mounting technique, centration error in the lens could leave the optical axis tilted significantly relative to the mount and, consequently, relative to the optical axis of the experiment. To solve this problem it is best to hold the lenses in a mount using the surface-mounting technique. In this way the optical axis of the lens is almost parallel to the optical axis of the experiment.

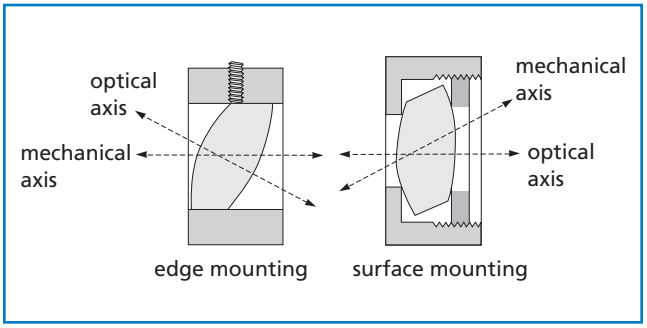

Figure 7.7 **Edge-mounting and surface-mounting lens-holder techniques**

Lenses with a short focal length are more prone to suffer centration-related problems than lenses with longer focal lengths because the negative effect of tilt increases as the focal length decreases. Surface-mounting techniques are best for accurately mounting short-focal-length lenses (which have highly curved surfaces).

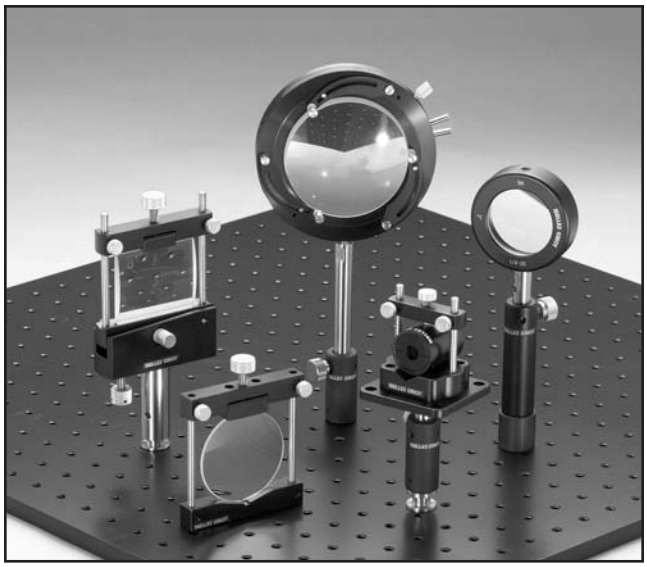

Choosing the right opto-mechanical lens mount requires an understanding of centration.

Opto-Mechanical Hardware Types

Opto-mechanical components can be separated into two general categories: fixed components and adjustable components. The most basic fixed components simply hold either an optical element or another hardware component. Examples of fixed components include simple lens mounts, posts, pillars, and adaptor plates. Adjustable components, essential to any optics laboratory, include translation stages, rotation stages, and adjustable mirror and optics mounts. Adjustable mounts typically have an adjustment screw for positioning and springs to preserve alignment and remove backlash. Often these mounts are automated with powered actuators which replace manual adjustment screws. For ease of setup, virtually all opto-mechanical components are designed to be mounted to optical tabletops directly or via threaded posts. Proper selection of fixed and adjustable components can improve experimental measurements and provide years of productive service.

ADJUSTABLE OPTICAL COMPONENT MOUNTS

Adjustable optical component mounts include mirror and beamsplitter mounts as well as prism tables.

Three linear and three angular motions are necessary to describe fully the motion and position of a solid body in space. Figure 7.1 identified the six degrees of freedom in the Cartesian frame of reference. When each of these degrees of freedom is singularly constrained by a hardware mount, the mount is defined as kinematic. Kinematic mounts offer simple and economical positioning. Typical construction includes a cone, groove, and flat in the front plate of the mount to constrain unwanted motion (see figure 7.8). The cone constrains motion in the x, y, and z axes. The groove constrains motion in θy (pitch) and θz (yaw). The flat constrains motion in θx (roll). All six axes are constrained but only once, making this design kinematic. This principle is used for mirror mounts and mounting plates. In the mirror mount, angular adjustment is accomplished with drive screws pushing against the groove and flat. Springs pull the plate against the drive screws.

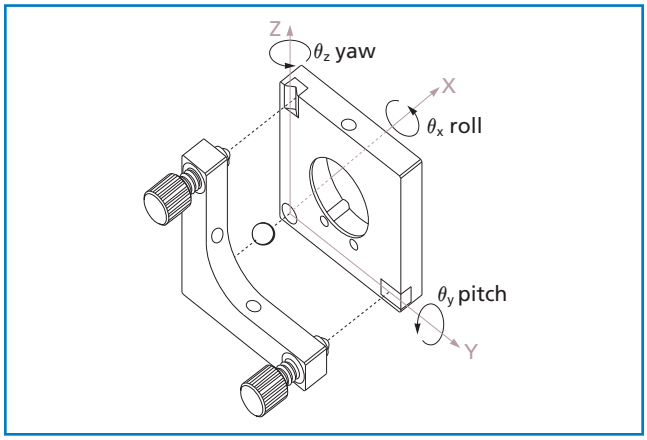

Figure 7.8 **Kinematic mount with a cone, groove, and flat**

Flexure mounts differ from kinematic mounts in that they use solid springs to constrain the mirror mounting plate. These springs, like leaf springs on automobiles, constrain the motion to up and down while limiting twist. The constraint on twist (front to back plate shear) offers improved positioning control and stability. Spring flexures are superior to traditional kinematic designs. The weight of the mirror and mirror plate is supported directly by the flexures, which eliminate all in-plane motion, leaving the drive threads free to control the remaining three degrees of freedom. In traditional kinematic designs, unless the mirror mount is pointing vertically, gravitational pull and resultant torque must be accommodated by the drive threads. Consequently, any play, no matter how small, results in pointing error and wobble. Mounts using flexures are not affected by this torque.

To achieve maximum performance from a flexure system, care is required when mounting and clamping the flexing element. The flexure merely constrains motion so that the resulting stage moves in the desired direction. In the two orthogonal directions, the flexure is rigid. The rigidity of the flexure in directions orthogonal to the axes of motion can be made as great as required by strapping or stiffening the flexure to produce a rigid link with small regions of flexibility near the clamping points. If this semi-rigid link is wide enough, resistance to twisting becomes enormous. Using a suitable return (coil) spring allows the flexure stage to be preloaded against the drive.

Kinematic and flexure mounts offer economical, precise positioning. Some cross-coupled motions, however, occur because the rotational axes are not centered on the surface of the mounted optic. Gimbal mounts provide angular adjustment without translation. The axes of rotation for gimbal mounts are orthogonal, noninteracting, stationary, and centered on the optic. Gimbal mounts are used for the most precise optical beam control applications. A comparison of kinematic, flexure, and gimbal mounts is shown in figure 7.9.

LENS HOLDERS

A variety of holders and mounts are available for holding lenses of all shapes and characteristics. Depending on the application, the optical element itself, the degree of precision required, and the number of directions along which adjustments need to be made, one type of lens holder might be preferrable to another. Cost considerations are also important, particularly in experimental setups in which a large number of optical components are mounted on holders.

The fixed-lens holder with a single screw retainer is a simple type of edge-mounting lens device. Its principal advantage is its low cost; its disadvantage is the fact that it has no mechanism for dealing with centration error. Additional hardware may have to be used to correct for optical axis tilt. This type of lens holder is suitable primarily for use with long-focal-length lenses in which centration error is not critical and applications in which wavefront distortion caused by tilt can be tolerated.

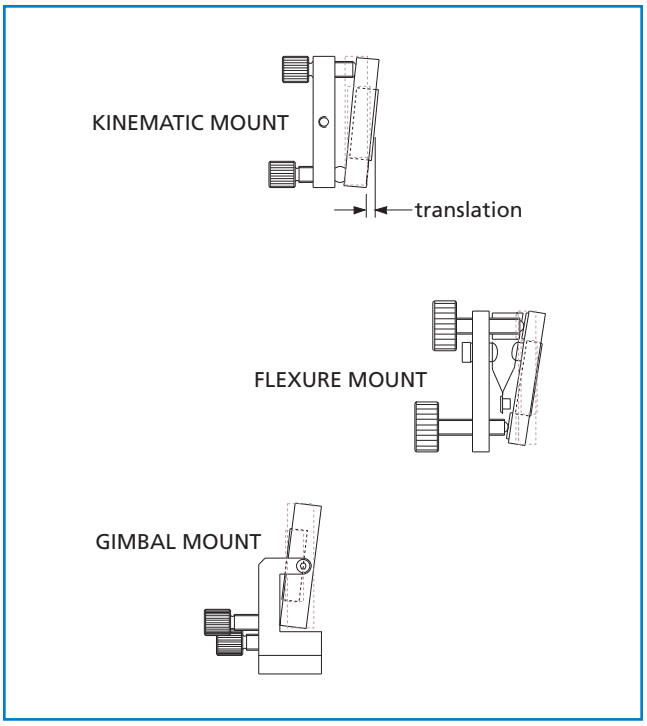

Figure 7.9 **Kinematic, flexure, and gimbal mounts**

The fixed-lens holder with a retaining ring can be used for a variety of applications in which a moderate degree of precision is required. Because it uses the surface-mounting technique, it does not suffer from the problems caused by centration error. Its major disadvantage is that each mount can be used only with a lens of a specific diameter. As a result, to hold lenses of various diameters, one would need an assortment of these holders, each with a different diameter.

The two-axis lens holder is essentially a fixed-lens holder with a retaining ring which is also equipped with a mechanism for adjusting the vertical and horizontal positions of the optical element. The advantage of this type of holder is that it is a single, compact piece of hardware which provides precision positioning in the plane perpendicular to the optical axis. Its disadvantage is that one needs a variety of different size lens holders to hold lenses of varying diameters.

The universal lens holder, a versatile piece of optical hardware, can be used to hold lenses of various diameters. These lens holders are available in a variety of styles. One uses a mechanism in which three radial screws, placed 120 degrees apart with respect to one another, grip the lens at three different points. The screws are loosened to open up the holder in order to place the lens in place and then they are tightened to hold the lens securely in place.

Fixed-lens holders with retaining ring

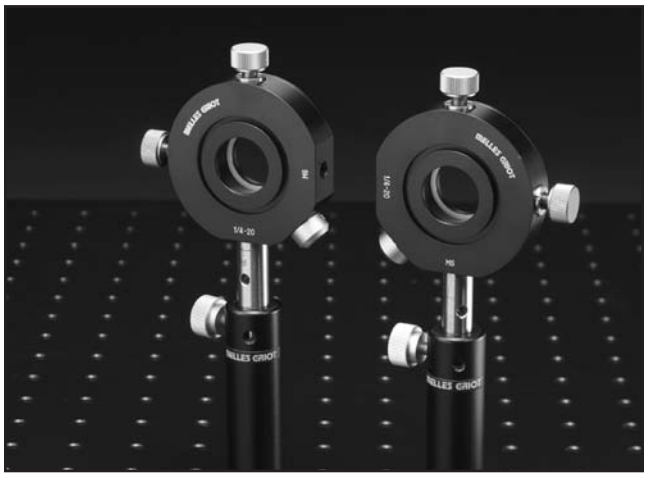

Two-axis lens holders

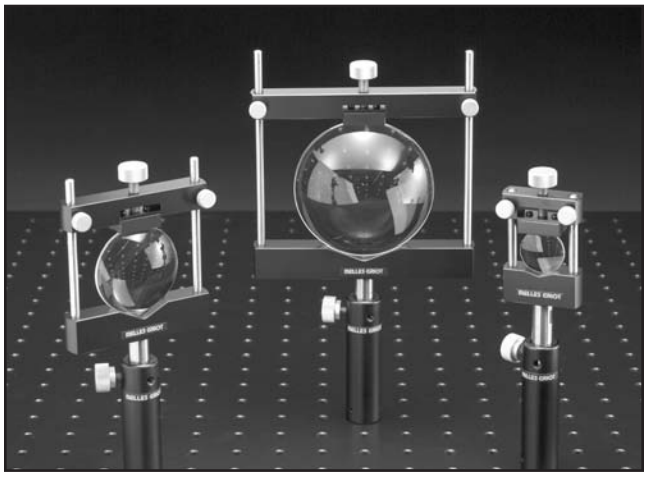

Universal lens holders

Another mechanism used is a combination V-block and vertically sliding clamp which works together to hold the lens in place. Both of these lens holders are useful because they allow easy removal and replacement of lenses. The disadvantage of this type of lens holder is that it suffers from the centration-error problems associated with edge-mounting lens holders. Another disadvantage is that the lower part of these lens holders has a fixed position with respect to the optical axis of the experiment. This means that when a different diameter lens is inserted into the holder, the holder height must be readjusted to maintain the optical axis.

The self-centering lens holder can easily hold lenses of different diameters, and, regardless of the size of the lens, the center of the lens is always aligned to the optical axis of the experimental setup. The holders use a special chuck with three flexible jaws which make it quite easy to load and unload lenses in applications in which one must regularly change lenses. The main disadvantages of these lens holders are those associated with edge-mounting holders. Due to the additional complexity of the mechanism, the self-centering lens holder can be more expensive than simpler lens holders.

Self-centering lens holders

MIRROR MOUNTS

The mounting and holding of mirrors are fundamentally different from the mounting and holding of lenses. Unlike a lens, which typically has curved surfaces, a mirror has a flat surface. Consequently, it is not necessary to adjust the position of the piece in the y or z directions. However, it is often necessary to tilt the object and adjust its position along the θy and θz directions. In some cases this angular adjustment could be 180 degrees or more (up to 360 degrees for beam-folding applications).

Unlike lenses, mirrors are not subject to centration error. However, when a mirror is fixed in place using only a radial screw, it very likely will be subject to asymmetrical stresses which can distort the surface of the mirror resulting in distortion of the optical wavefront. This could be the cause of significant error in optical applications requiring wavefront quality of $\lambda/10$ or higher. The solution to this problem is to hold the mirror with a symmetrical clamping mechanism, such as a retaining ring, which applies pressure uniformly from all directions and thus minimizes the possibility of surface distortion.

The key parameters characterizing the performance of a mirror mount are range, resolution, repeatability, and stability. The term *range* refers to the total angular range of motion that the mount can move along each axis. *Resolution* refers to the smallest adjustment increment. *Repeatability* refers to the ability of the optical piece of the hardware to return to its original position following a specific movement or adjustment. *Stability* is a measure of how unchanging the form and shape of the hardware are with respect to time and when the hardware is subjected to mechanical or thermal stresses.

Mirror mounts are offered in three main styles: kinematic mounts, flexure mounts, and gimbal mounts. These three fundamental mirror-mount designs result in pieces of optical component hardware that demonstrate different performance characteristics and are suitable for different applications.

In a ***kinematic mirror mount***, the mirror is mounted on a movable plate. The angle of this front plate is adjusted relative to a fixed back plate. The adjustments are made using two adjustment screws which are mounted on the opposite corners of the mount. The plate is preloaded against these screws and against a fixed ball bearing by a single coil spring. The arrangement of the hardware pieces in this type of mount is based on a common mechanical design referred to as the cone, groove, and flat arrangement. In this fashion it is possible to perform tip and tilt adjustments, but over a limited range only. Kinematic mirror mounts are also available with three adjustment screws. The third adjuster allows linear adjustment, typically focus, to be made in addition to tip and tilt.

As shown in figure 7.10, the center of rotation of a kinematic mount is outside of the plane of mirror. As the angular position of the mirror is adjusted, the optical beam not only is angularly adjusted but also undergoes a slight

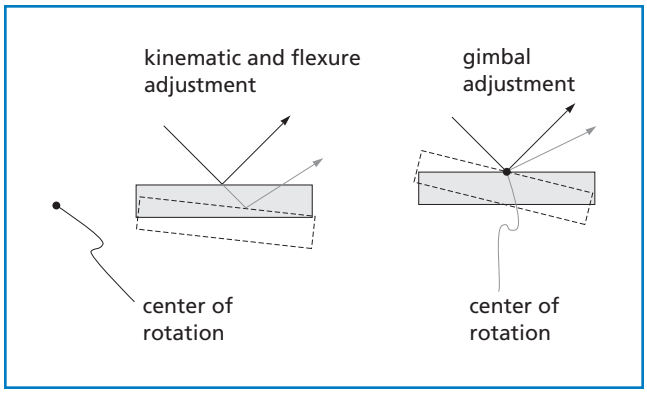

Figure 7.10 **Center-of-rotation comparison for kinematic, flexure, and gimbal adjustments**

translational displacement as well. Furthermore, because the tip and tilt adjustments are not truly orthogonal, the magnitude of this undesirable translation effect is not constant and varies as the mount is adjusted. The combined effect of beam translation and nonorthogonality creates a situation in which several adjustment iterations may have to be made when performing optical alignment in an experimental system using one or more kinematic mirror mounts. Additional disadvantages of kinematic mirror mounts include a relatively limited range of motion, typically between 5 and 10 degrees, as well as limitations in the resolution and repeatability characteristics of the mount.

In spite of these disadvantages, because of their simple construction, kinematic mounts can be very cost effective in many applications and are used widely.

Flexure mirror mounts come in a variety of configurations. Some configurations offer performance and cost comparable to those of kinematic mirror mounts. Other configurations offer resolution and repeatability of a few arc seconds.

In a flexure mirror mount, the motion of the mirror-mounting plate is constrained through the use of leaf-style springs, which are a form of solid spring mechanism. As a result of this arrangement, both twist and shear motions, with respect to the fixed back plate, are minimized. Consequently, the repeatability and stability of the entire mechanism are greatly improved. An additional benefit is that flexure mirror mounts can handle much heavier loads than kinematic mounts, and there is therefore much less chance of deformation. However, similar to kinematic-style mirror mounts, flexure mirror mounts have their center of rotation located outside of the surface of the mirror, and, as a result, the tip and tilt adjustments are not truly orthogonal. Consequently, as the optical beam undergoes an angular change of direction, it also gets slightly shifted in a translational direction.

Gimbal mirror mounts solve the two major problems associated with kinematic and flexure mirror mounts by placing the surface of the mirror at the center of rotation, thus eliminating any translation as the mirror is rotated, and by eliminating cross-coupling between the θy and θz axes. In general, gimbal mirror mounts offer a higher degree of resolution, repeatability, and stability than either flexure or kinematic mounts.

Gimbal mounts are available in a wide variety of configurations, but their increased complexity and associated manufacturing costs result in their being more expensive than either flexure or kinematic mirror mounts.

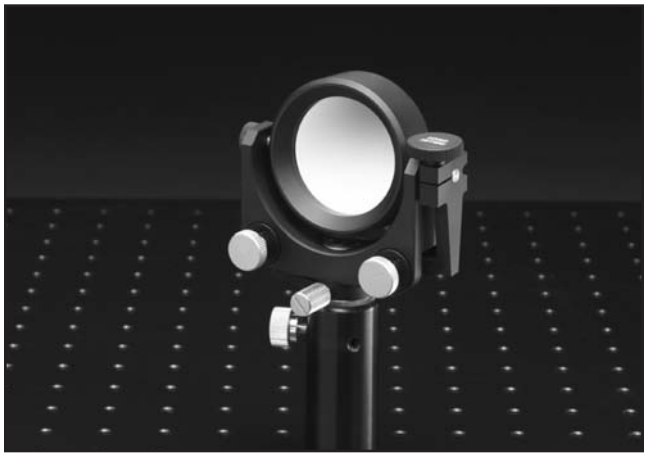

Gimbal mirror mount

PRISMS AND CUBE BEAMSPLITTER HOLDERS

A convenient and economical method of mounting and positioning prisms, cube beamsplitters, and similar components which require adjustment in angular axes (θx, θy, θz) is the prism/beamsplitter table. These devices are kinematic mounts with three adjusters which provide angular adjustment in θx and θy. Adjustment in θz is obtained by rotating the table on its mounting post. Moving all three adjusters together in the same direction and in the same amount provides a small amount of vertical translation. The optic can be held on the table by gravity or by a clamping mechanism.

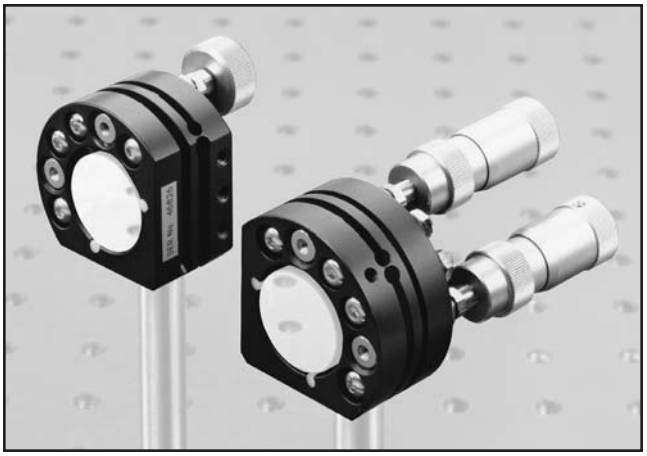

Flexure mirror mounts

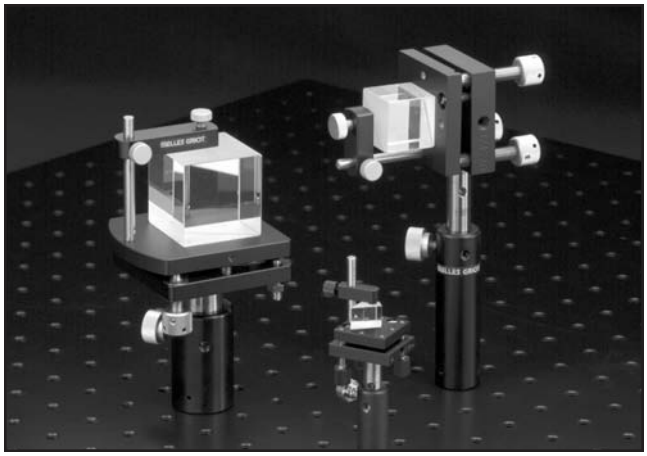

Prism/beamsplitter tables

FILTER HOLDERS

Filter holders are used to mount filters on posts. Holders which retain the filter with a spring clip can hold either square or round filters. Holders which retain the filter with nylon-tipped screws protect the edges from damage are typically used only with square filters. Multiple filter holders are ideal for stacking several filters in a beam path. In these devices, the filter is held in place by gravity.

Special holders are required for circular-wedge variable neutral-density filters because the holder must allow for precise rotation or translation of the filter. The circular filter holder consists of two assemblies. One is the outer knurled ring and the other is the central hub. The outer ring allows one to rotate the filter without touching the optical element. The central hub holds the filter securely in place while allowing rotation about its axis. Typically a magnetic system allows firm yet easy adjustment with positive retention of the selected angle.

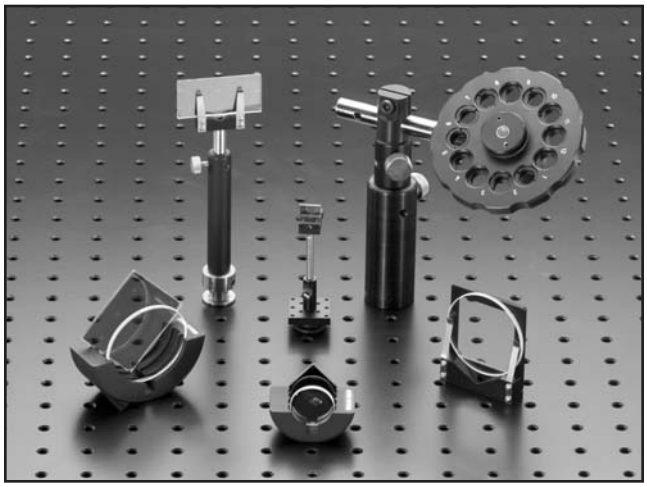

Filter mount options

ROTARY POLARIZER HOLDERS

Rotary polarizer holders are designed to mount and rotate optical elements such as dichroic sheet polarizers, infrared polarizers, calcite prism polarizers, and quartz or mica retardation plates. Alignment of the polarizer or retardation plate to the engraved scale is accomplished by first mounting the optical element in the adaptor so that its line of orientation is near the zero shown on the engraved scale.

Standard rotary polarizer holders provide 360 degrees of rotation with a resolution of 1 degree. Precision rotary polarizer holders combine the 360 degrees of manual rotation with approximately 15 degrees of high-resolution micrometer-driven adjustment to provide a resolution of 5 arc minutes.

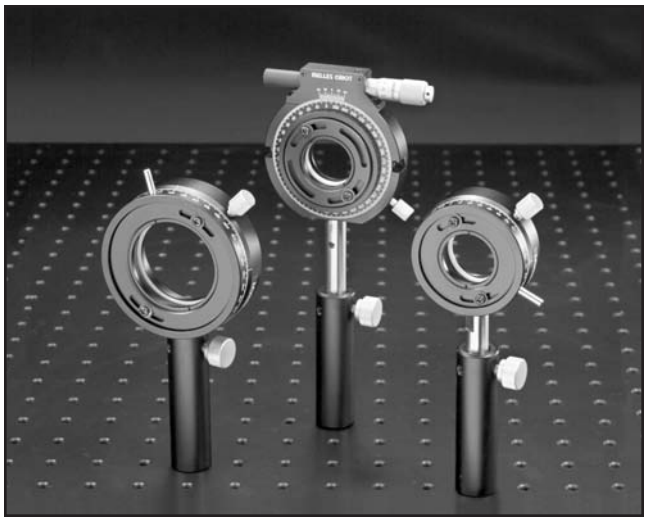

Rotary polarizer holders

PINHOLE AND SLIT HOLDERS

Pinholes and slits, typically used for spatial filtering and optical beam attenuation, are essentially tiny openings that have been very accurately drilled or cut in thin stainless steel substrates. Pinholes come in a variety of sizes ranging from about 1 to 1000 μm. Similarly, slits are available in widths ranging from 5 to 200 μm. Because of the small size and delicate nature of these elements, special holders are required to mount and position them. In a pinhole mount, the precision slit or pinhole is held securely in place by a retaining ring within a recess with a diameter that matches the size of the stainless steel pinhole substrate. Pinhole/slit positioners are used to move and position the mounted pinhole or slit about its optical axis.

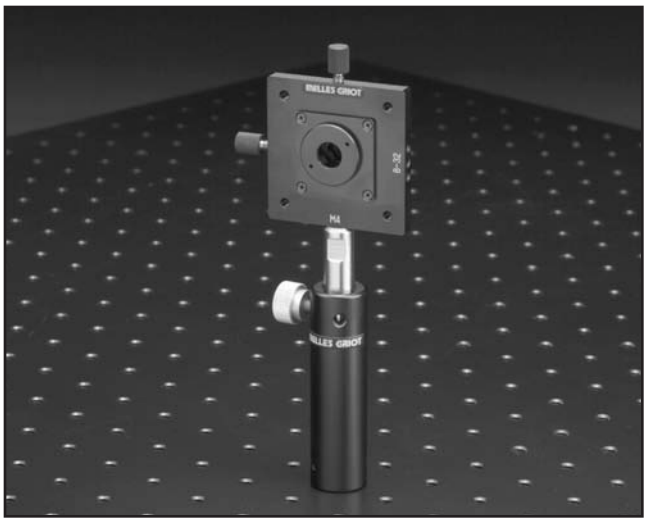

Pinhole/slit positioner and holder

FIBER-OPTIC HOLDERS

The opto-mechanical devices used to hold an optical fiber are commonly referred to as fiber chucks. Fiber chucks, which come in a variety of configurations, are typically designed to hold standard diameter fibers. Collet and side-loading fiber chucks hold bare optical fibers with a standard cladding diameter of 250 μm. Universal fiber chucks are designed to hold both bare and jacketed fibers with diameters ranging from 125 μm to 3.9 mm.

V-groove fiber holders are ideal for holding bare, single-mode optical fibers with diameters as small as 125 μm. The main advantage of this type of fiber holder is the ease with which a fiber can be mounted and removed. Typically manufactured from magnetic stainless steel, they usually use magnetic clamps to hold the fiber in place. The clamp mechanism must provide a secure, yet delicate grip ensuring that the optical fiber is not crimped or deformed.

Chucks for holding optical fibers

CYLINDRICAL LASER HOLDERS

Most helium-neon lasers and many diode laser assemblies used in laboratory applications come in a cylindrical housing with an outside diameter of 45 mm or less. A variety of components are available to facilitate the mounting of these lasers to tabletops, posts, or rod systems and to align them to the optical axis. Most of the holders provide ± 4 degrees of angular adjustment with a resolution of approximately 0.4 arc minute. Models are available with or without micrometer drives for angular adjustments.

Cylindrical laser holders

Sources of Error

BACKLASH

Imagine a positioner that is being driven in a positive direction by a motorized actuator. If the motor reverses its direction, the positioner will not immediately move in the reverse direction. This effect is commonly referred to as backlash.

Backlash results from the buildup of manufacturing tolerances in the threaded or geared pieces that constitute the finished device. By careful design and quality manufacturing, backlash can be minimized, but it cannot be completely eliminated. One way to minimize backlash is apply a compressive force, usually with a spring mechanism, to force the components in the mechanical train to remain in contact at all times. This method, called *preloading*, is commonly found in high-quality optical stages.

CROSS COUPLING

The tendency of a motion along one degree of freedom to cause motion in an orthogonal degree of freedom is referred to as *cross coupling*. In an ideal x-y-z stage, a movement along one axis should cause absolutely no movement in the other two axes. Unfortunately, this is not the case with real-world devices because of manufacturing imperfections, design tolerances, and other considerations. For example, if the axes of an x-y stage are misaligned by 1 arc minute, 100 mm of travel along the x axis will cause 0.1 μm of travel along the y axis—inconsequential in most applications, but still present. Some devices have cross coupling built into the design. Inherent in their design, kinematic and flexure mirror mounts, discussed earlier, have significant cross coupling between their rotational and linear axes, and some cross coupling among their rotational axes, whereas gimbal mirror mounts do not. A stack of single-axis stages used to emulate a multiaxis stage will almost always have more cross coupling than a multiaxis stage itself.

FREE PLAY

A close relative of backlash, *free play* can be defined as the amount of movement that can be made to the part at the beginning of a mechanical train (e.g., a series of gears) without causing motion at the end of the train. Obviously, the more parts there are in the mechanical train, the greater the free play will be. Precision mechanical devices typically have very little free play, but through frequent use, wear will gradually cause the free play to increase. Operating the device outside of the manufacturer's recommended operating specifications, or a lack of regular maintenance, can accelerate this process.

STICTION

When one tries to slide a heavy load on the floor, the object may refuse to move at first, but, once it starts moving, it is much easier to keep it going. This is the result of friction. There are two types of friction: moving friction and static friction (aka *stiction*). The coefficient of static friction is larger than the coefficient of moving friction; consequently, it requires a greater force to get the load moving than it does to keep it moving. If the coefficient of static friction is much larger than the coefficient of moving friction, a disproportionate amount of force may be applied to the load when it first starts to move causing it to over accelerate or "jump." This is often referred to as the stiction effect.

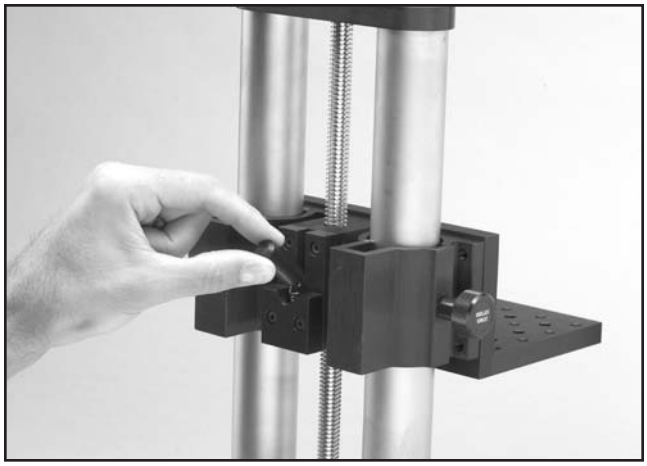

Backlash in screw mechanisms can be minimized through preloading.

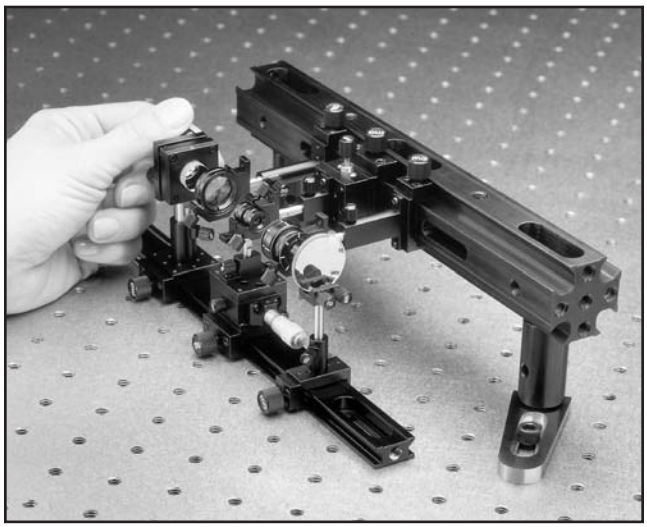

Optical setup errors are the result of the mechanical imperfections in the adjustment mechanisms.

Material Properties and Selection

MATERIALS AND PROPERTIES

The design of robust, accurate, and stable opto-mechanical components begins with the proper selection of construction materials. Factors such as cost, machinability, durability, corrosion resistance, hardness, thermal expansion, and weight must all be considered. Most CVI Melles Griot opto-mechanical component designs use aluminum, steel, and brass because of their overall desirable properties. Specialty materials are used in certain circumstances. For example, if a thermally stable Fabry-Perot interferometer is desired, then a material with a small thermal expansion coefficient like Invar™, quartz, or a ceramic should be used to hold optical elements. The cost increase from material selection must be weighed against specification improvement for the particular application.

Aluminum

Aluminum is the most commonly used opto-mechanical hardware material. It is economical, easy to machine and lightweight; it also has a good stiffness-to-weight ratio, and low creep. Finished products are soft but can be anodized to harden surfaces for improved wear and durability, and surfaces can be blackened for low reflectivity.

Aluminum expands or contracts with changes in temperature, making it less desirable for components that require long-term stability. The high coefficient of thermal expansion for aluminum is partially offset by a high thermal conductivity. By quickly reducing thermal gradients within the component, large conductivity mitigates relative distortions caused by temperature-induced differences in expansion. This quality is measured by a low relative distortion figure (thermal expansion coefficient/thermal conductivity). Furthermore, aluminum's large thermal heat capacity buffers local thermal perturbations thereby minimizing temperture changes and resultant dimensional fluctuations.

Aluminum is the material of choice for optical mounts such as lens holders, kinematic mirror mounts, and prism tables. One drawback to using aluminum is the relatively high friction between a moving steel adjustment screw and the aluminum body. High levels of friction can lead to excessive thread wear over time and a reduction in adjustment screw feel and fit. Good lubricants can be used to reduce friction and extend the component's lifetime. For an OEM application requiring only occasional adjustment, this is an excellent choice. For heavy use, or where a small increase in expense can be tolerated, the preferred approach is to install a brass bushing into the aluminum body. The brass insert reduces baseline friction (no lubrication needed) and allows closer tolerances to improve fit and feel. Excellent results for the entire series of kinematic mounts have been achieved by using brass inserts in aluminum bodies.

Steel

Although it is more expensive to machine than aluminum or brass, steel has a better stiffness value and a lower thermal expansion coefficient. While the stiffness-to-weight ratio is very similar, the relative distortion figure is worse because of the low thermal conductivity of steel. Steel is commonly used in positioning stages to minimize temperature-induced errors and to hold tight dimensional specifications for varying loads.

A unique application of steel is found in high-precision flexure mounts. These mounts are fabricated from a single piece of hardened spring steel which minimizes differential thermal expansion and assembly wear problems. Steel is particularly useful for making flexures and springs because of it high yield strength. Stainless steel is also a popular material for posts and pillars because of its relatively high stiffness and corrosion resistance. CVI Melles Griot damped StableRods™, fabricated from nickel-plated steel tubing with a patented vibration-reducing core filler, is an example of material selection designed to solve an opto-mechanical problem.

Brass

The material of choice for most 18^{-th} and 19^{-th} century instrument makers, brass is the traditional opto-mechanical material. Although its excellent machinability and good surface finish keep it a contender, brass is increasingly being replaced by aluminum and steel because of its relatively low stiffness-to-weight ratio. Some hybrid components are made largely of aluminum or steel, but brass is used selectively for precision bushings or adjustment screw threads owing to its anti-seizing properties. CVI Melles Griot still provides some brass mounts in which economic considerations do not warrant a change to hybrids. For example, CVI Melles Griot flexure mounts continue to have brass bodies with stainless steel adjustment screws inserted directly into the body.

THERMAL EXPANSION

Different materials respond to changes in temperature with varying degrees of expansion. Of the material used in making opto-mechanical components, steel has one of the lowest coefficients of thermal expansion. It is an excellent choice for positioning applications in which thermal stability is needed at a fair price. The challenges of today's research leads to increasing demands for long-term stability, extreme accuracy, and many degrees of freedom. Advancements in submicron structures on integrated chips, single-mode fiber pigtailing, and super-resolution microscopy demand an intelligent approach to the many types of materials that must be combined into today's positioning systems.

A solid bar of stainless steel, 10 mm long, will change in length about 100 nm for every degree change in temperature (Celsius).This change in length is hundreds of atomic diameters. If the steel is used to position an optical component, it may shift the component away from the necessary location. Thus, the designer of a precision component or instrument must engineer a method to compensate for or eliminate thermally induced strain through design and material selection. This design process is known as athermalization.

MATERIAL FINISHES

In many cases, material finish is just as important as the material itself. Proper finishing provides protection, increases durability, and improves appearance. Most opto-mechanical components are black anodized or otherwise finished to reduce unwanted and potentially hazardous spectral reflections.

Anodizing, an electrochemical conversion coating, is the preferred finish for aluminum since it also protects and hardens the material, increasing scratch and wear resistance. Anodized aluminum, which is slightly porous, creates a matte, rather than smooth, texture, which diffuses light and minimizes direct reflections. This is particularly important when high-energy lasers, which might cause eye damage, are used. The porousness of an anodized finish, however, makes it unsuitable for vacuum applications beyond 1×10^{-6} Torr.

The finish used on steel depends on the application. Steel parts can be nickel plated for corrosion resistance and durability. Steel used for translation stages is coated with black chrome to minimize reflections and corrosion. Because stainless steel is inherently corrosion free and durable, it is usually passivated and brushed to minimize specular reflections. Passivation is a chemical surface treatment which removes foreign particles introduced by machining or heat-treating. Brass is usually coated electrophoretic black, painted, or left unfinished owing to its ability to resist corrosion.

SCREW FASTENERS

Socket-head cap screws are used almost exclusively to assemble various types of opto-mechanical components. The hexagonal key slot in the head of the screw allows the user to impart a significant amount of tightening torque compared to cross-head or slotted-head screws. The most common sizes of socket-head fasterners used with opto-mehcanical components are ¼-20, 8-32, and 6-32. In the metric system, the most common are M6, M4, M3, and M2. Details of these types of screws are shown in the following tables. One little known fact about socket-head cap screws is that the thread diameter is the same size as the head height. This is done to provide a means for easily determining the size of the screw thread if the screw has already been installed.

Socket-head cap screws

Comparison of Material Properties

	Aluminum	Brass	Stainless Steel
Type	6061-T6	Free-cutting	303
Density (lb/in.^{3})	0.10	0.31	0.28
Stiffness (1×10^6 lb/in.^{2})	10	14	28
Yield Strength (1×10^3 lb/in.^{2})	40	52	75
Coefficient of Thermal Expansion (1×10^{-3} in./in./F)	12	11	6
Typical Finish	Anodize	Paint, black chrome, oxide	Passivation
Advantages	Light weight, high strength-to-weight ratio	Anti-seizing properties	Stiffness, corrosion resistance

Socket-head Cap Screw—Inch

	Thread Diameter (in.)	Thread Pitch (in.)	Head Height (in.)	Head Diameter (in.)	Allen Key Size (in.)
6-32	0.138	.03 (32 TPI)	0.138	0.226	7/64
8-32	0.164	.03 (32 TPI)	0.164	0.270	9/64
1/4-20	0.250	.05 (20 TPI)	0.250	0.375	3/16

Socket-head Cap Screw—Metric

	Thread Diameter (mm)	Thread Pitch (mm)	Head Height (mm)	Head Diameter (mm)	Allen Key Size (mm)
M2	2	0.4	2	3.8	1.5
M3	3	0.5	3	5.5	2.5
M4	4	0.7	4	7.0	3.0
M6	6	1.0	6	10.0	5.0