Gaussian Beam Optics 2

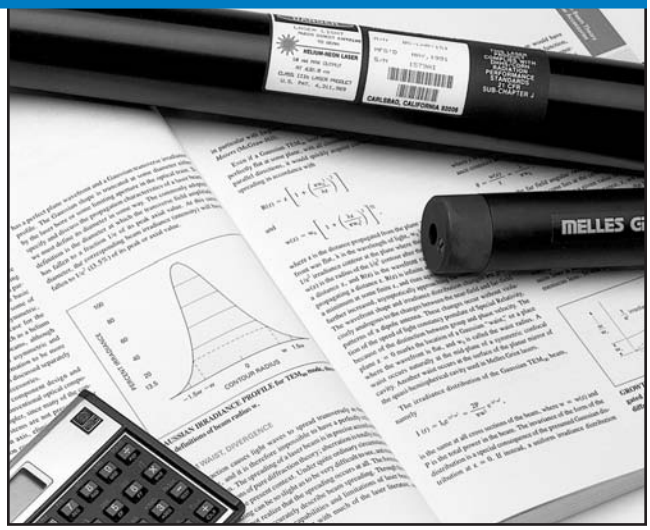

Gaussian Beam Propagation	**2.2**
Transformation and Magnification by Simple Lenses	**2.6**
Real Beam Propagation	**2.10**
Lens Selection	**2.13**

Gaussian Beam Propagation

In most laser applications it is necessary to focus, modify, or shape the laser beam by using lenses and other optical elements. In general, laser-beam propagation can be approximated by assuming that the laser beam has an ideal Gaussian intensity profile, which corresponds to the theoretical TEM_{00} mode. Coherent Gaussian beams have peculiar transformation properties which require special consideration. In order to select the best optics for a particular laser application, it is important to understand the basic properties of Gaussian beams.

Unfortunately, the output from real-life lasers is not truly Gaussian (although the output of a single mode fiber is a very close approximation). To accommodate this variance, a quality factor, M^2 (called the "M-squared" factor), has been defined to describe the deviation of the laser beam from a theoretical Gaussian. For a theoretical Gaussian, $M^2 = 1$; for a real laser beam, $M^2>1$. The M^2 factor for helium neon lasers is typically less than 1.1; for ion lasers, the M^2 factor typically is between 1.1 and 1.3. Collimated TEM_{00} diode laser beams usually have an M^2 ranging from 1.1 to 1.7. For high-energy multimode lasers, the M^2 factor can be as high as 25 or 30. In all cases, the M^2 factor affects the characteristics of a laser beam and cannot be neglected in optical designs.

In the following section, Gaussian Beam Propagation, we will treat the characteristics of a theoretical Gaussian beam (M^2=1); then, in the section Real Beam Propagation we will show how these characteristics change as the beam deviates from the theoretical. In all cases, a circularly symmetric wavefront is assumed, as would be the case for a helium neon laser or an argon-ion laser. Diode laser beams are asymmetric and often astigmatic, which causes their transformation to be more complex.

Although in some respects component design and tolerancing for lasers is more critical than for conventional optical components, the designs often tend to be simpler since many of the constraints associated with imaging systems are not present. For instance, laser beams are nearly always used on axis, which eliminates the need to correct asymmetric aberration. Chromatic aberrations are of no concern in single-wavelength lasers, although they are critical for some tunable and multiline laser applications. In fact, the only significant aberration in most single-wavelength applications is primary (third-order) spherical aberration.

Scatter from surface defects, inclusions, dust, or damaged coatings is of greater concern in laser-based systems than in incoherent systems. Speckle content arising from surface texture and beam coherence can limit system performance.

Because laser light is generated coherently, it is not subject to some of the limitations normally associated with incoherent sources. All parts of the wavefront act as if they originate from the same point; consequently, the emergent wavefront can be precisely defined. Starting out with a well-defined wavefront permits more precise focusing and control of the beam than otherwise would be possible.

For virtually all laser cavities, the propagation of an electromagnetic field, $E^{(0)}$, through one round trip in an optical resonator can be described mathematically by a propagation integral, which has the general form

$$E^{(1)}(x,y) = e^{-jkp} \iint_{Input\,Plane} K(x,y,x_0,y_0)\,E^{(0)}(x_0,y_0)\,dx_0 dy_0 \qquad (2.1)$$

where K is the propagation constant at the carrier frequency of the optical signal, p is the length of one period or round trip, and the integral is over the transverse coordinates at the reference or input plane. The function K is commonly called the propagation kernel since the field $E^{(1)}(x, y)$, after one propagation step, can be obtained from the initial field $E^{(0)}(x_0, y_0)$ through the operation of the linear kernel or "propagator" $K(x, y, x_0, y_0)$.

By setting the condition that the field, after one period, will have exactly the same transverse form, both in phase and profile (amplitude variation across the field), we get the equation

$$\gamma_{nm} E_{nm}(x,y) \equiv \iint_{Input\,Plane} K(x,y,x_0,y_0)\,E_{nm}(x_0,y_0)\,dx_0 dy_0 \qquad (2.2)$$

where E_{nm} represents a set of mathematical eigenmodes, and γ_{nm} a corresponding set of eigenvalues. The eigenmodes are referred to as transverse cavity modes, and, for stable resonators, are closely approximated by Hermite-Gaussian functions, denoted by TEM_{nm}. (Anthony Siegman, Lasers)

The lowest order, or "fundamental" transverse mode, TEM_{00} has a Gaussian intensity profile, shown in figure 2.1, which has the form

$$I(x,y) \propto e^{-k(x^2+y^2)} \qquad (2.3)$$

In this section we will identify the propagation characteristics of this lowest-order solution to the propagation equation. In the next section, Real Beam Propagation, we will discuss the propagation characteristics of higher-order modes, as well as beams that have been distorted by diffraction or various anisotropic phenomena.

BEAM WAIST AND DIVERGENCE

In order to gain an appreciation of the principles and limitations of Gaussian beam optics, it is necessary to understand the nature of the laser output beam. In TEM_{00} mode, the beam emitted from a laser begins as a perfect plane wave with a Gaussian transverse irradiance profile as shown in figure 2.1. The Gaussian shape is truncated at some diameter either by the internal dimensions of the laser or by some limiting aperture in the optical train. To specify and discuss the propagation characteristics of a laser beam, we must define its diameter in some way. There are two commonly accepted definitions. One definition is the diameter at which the beam irradiance (intensity) has fallen to $1/e^2$ (13.5 percent) of its peak, or axial value and the other is the diameter at which the beam irradiance

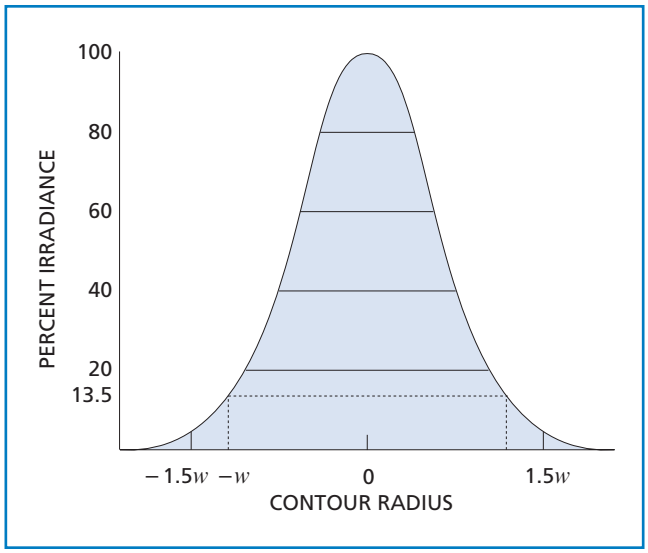

Figure 2.1 **Irradiance profile of a Gaussian TEM_{00} mode**

(intensity) has fallen to 50 percent of its peak, or axial value, as shown in figure 2.2. This second definition is also referred to as FWHM, or full width at half maximum. For the remainder of this guide, we will be using the $1/e^2$ definition.

Diffraction causes light waves to spread transversely as they propagate, and it is therefore impossible to have a perfectly collimated beam. The spreading of a laser beam is in precise accord with the predictions of pure diffraction theory; aberration is totally insignificant in the present context. Under quite ordinary circumstances, the beam spreading can be so small it can go unnoticed. The following formulas accurately describe beam spreading, making it easy to see the capabilities and limitations of laser beams.

Even if a Gaussian TEM_{00} laser-beam wavefront were made perfectly flat at some plane, it would quickly acquire curvature and begin spreading in accordance with

$$R(z) = z\left[1+\left(\frac{\pi w_0^2}{\lambda z}\right)^2\right] \tag{2.4}$$

and

$$w(z) = w_0\left[1+\left(\frac{\lambda z}{\pi w_0^2}\right)^2\right]^{1/2} \tag{2.5}$$

where z is the distance propagated from the plane where the wavefront is flat, λ is the wavelength of light, w_0 is the radius of the $1/e^2$ irradiance contour at the plane where the wavefront is flat, $w(z)$ is the radius of the $1/e^2$ contour after the wave has propagated a distance z, and $R(z)$ is the wavefront radius of curvature after propagating a distance z. $R(z)$ is infinite at $z = 0$, passes through a minimum at some finite z, and rises again toward infinity as z is further increased, asymptotically approaching the value of z itself. The plane $z = 0$ marks the location of a Gaussian waist, or a place where the wavefront is flat, and w_0 is called the beam waist radius.

The irradiance distribution of the Gaussian TEM_{00} beam, namely,

$$I(r) = I_0 e^{-2r^2/w^2} = \frac{2P}{\pi w^2} e^{-2r^2/w^2}, \tag{2.6}$$

where $w = w(z)$ and P is the total power in the beam, is the same at all cross sections of the beam.

The invariance of the form of the distribution is a special consequence of the presumed Gaussian distribution at $z = 0$. If a uniform irradiance distribution had been presumed at $z = 0$, the pattern at $z = \infty$ would have been the familiar Airy disc pattern given by a Bessel function, whereas the pattern at intermediate z values would have been enormously complicated.

Simultaneously, as $R(z)$ asymptotically approaches z for large z, $w(z)$ asymptotically approaches the value

$$w(z) = \frac{\lambda z}{\pi w_0} \tag{2.7}$$

where z is presumed to be much larger than $\pi w_0/\lambda$ so that the $1/e^2$ irradiance contours asymptotically approach a cone of angular radius

$$\theta = \frac{w(z)}{z} = \frac{\lambda}{\pi w_0}. \tag{2.8}$$

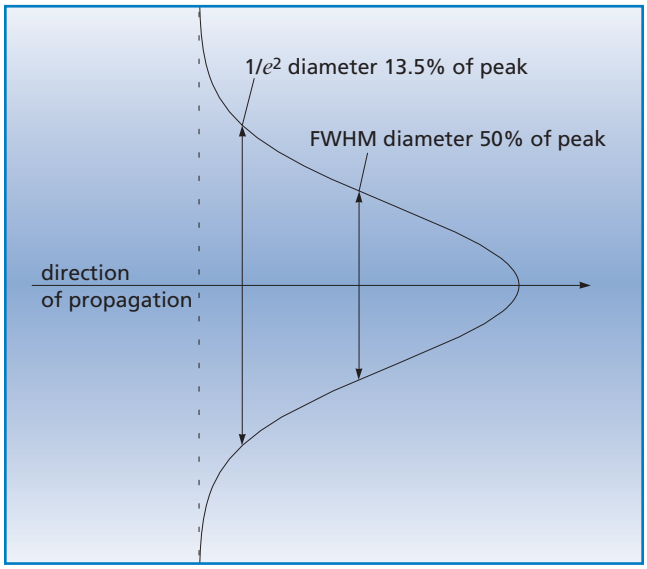

Figure 2.2 **Diameter of a Gaussian beam**

This value is the far-field angular radius (half-angle divergence) of the Gaussian TEM_{00} beam. The vertex of the cone lies at the center of the waist, as shown in figure 2.3.

It is important to note that, for a given value of λ, variations of beam diameter and divergence with distance z are functions of a single parameter, w_0, the beam waist radius.

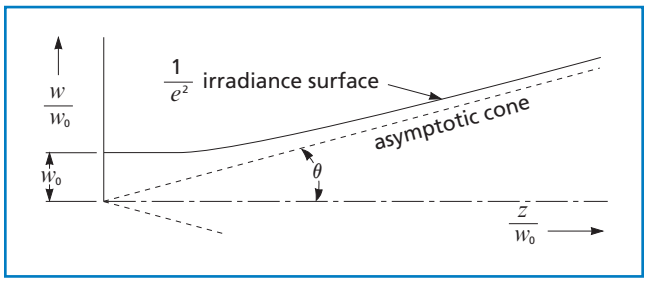

Figure 2.3 **Growth in $1/e^2$ radius with distance propagated away from Gaussian waist**

Near-Field vs Far-Field Divergence

Unlike conventional light beams, Gaussian beams do not diverge linearly. Near the beam waist, which is typically close to the output of the laser, the divergence angle is extremely small; far from the waist, the divergence angle approaches the asymptotic limit described above. The Raleigh range (z_R), defined as the distance over which the beam radius spreads by a factor of $\sqrt{2}$, is given by

$$z_R = \frac{\pi w_0^2}{\lambda} \quad . \tag{2.9}$$

At the beam waist ($z = 0$), the wavefront is planar [R(0) = ∞]. Likewise, at $z = \infty$, the wavefront is planar [$R(\infty) = \infty$]. As the beam propagates from the waist, the wavefront curvature, therefore, must increase to a maximum and then begin to decrease, as shown in figure 2.4. The Raleigh range, considered to be the dividing line between near-field divergence and mid-range divergence, is the distance from the waist at which the wavefront curvature is a maximum. Far-field divergence (the number quoted in laser specifications) must be measured at a distance much greater than z_R (usually >10 × z_R will suffice). This is a very important distinction because calculations for spot size and other parameters in an optical train will be inaccurate if near- or mid-field divergence values are used. For a tightly focused beam, the distance from the waist (the focal point) to the far field can be a few millimeters or less. For beams coming directly from the laser, the far-field distance can be measured in meters.

Typically, one has a fixed value for w_0 and uses the expression

$$w(z) = w_0\left[1+\left(\frac{\lambda z}{\pi w_0^2}\right)^2\right]^{1/2}$$

to calculate $w(z)$ for an input value of z. However, one can also utilize this equation to see how final beam radius varies with starting beam radius at a fixed distance, z. Figure 2.5 shows the Gaussian beam propagation equation plotted as a function of w_0, with the particular values of λ = 632.8 nm and z = 100 m.

The beam radius at 100 m reaches a minimum value for a starting beam radius of about 4.5 mm. Therefore, if we wanted to achieve the best combination of minimum beam diameter and minimum beam spread (or best collimation) over a distance of 100 m, our optimum starting beam radius would be 4.5 mm. Any other starting value would result in a larger beam at z = 100 m.

We can find the general expression for the optimum starting beam radius for a given distance, z. Doing so yields

$$w_0(\text{optimum}) = \left(\frac{\lambda z}{\pi}\right)^{1/2} \tag{2.10}$$

Using this optimum value of w_0 will provide the best combination of minimum starting beam diameter and minimum beam spread [ratio of

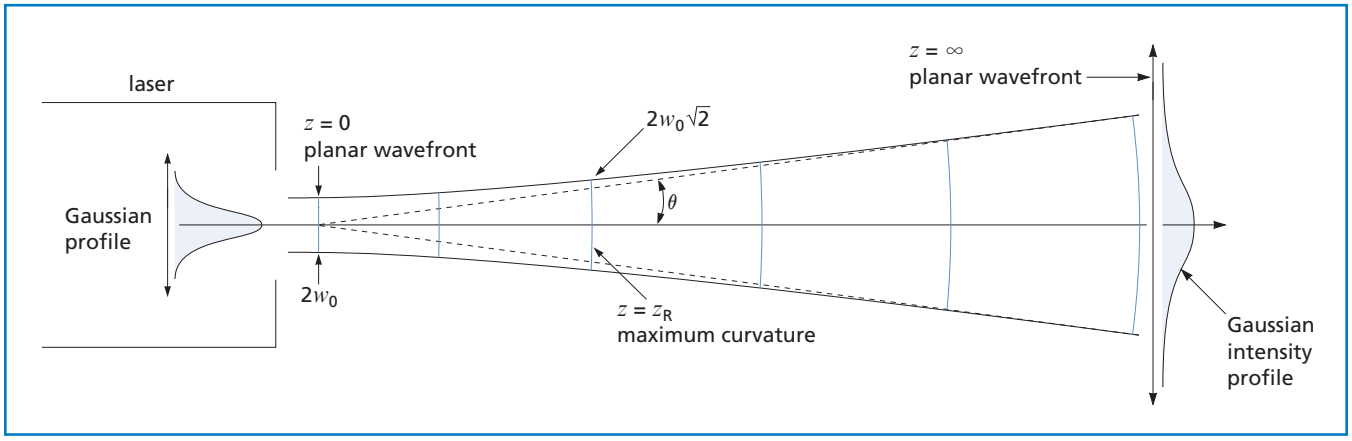

Figure 2.4 **Changes in wavefront radius with propagation distance**

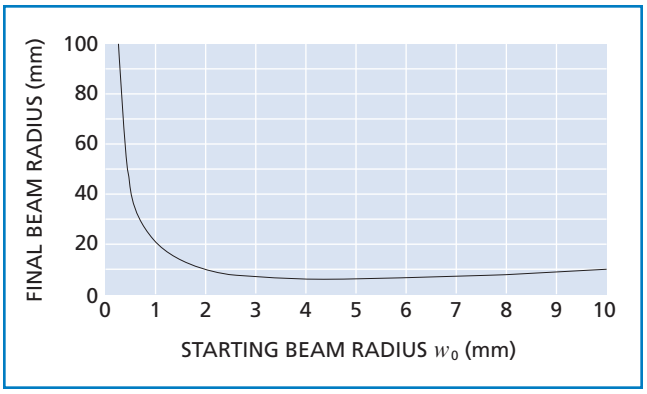

Figure 2.5 **Beam radius at 100 m as a function of starting beam radius for a HeNe laser at 632.8 nm**

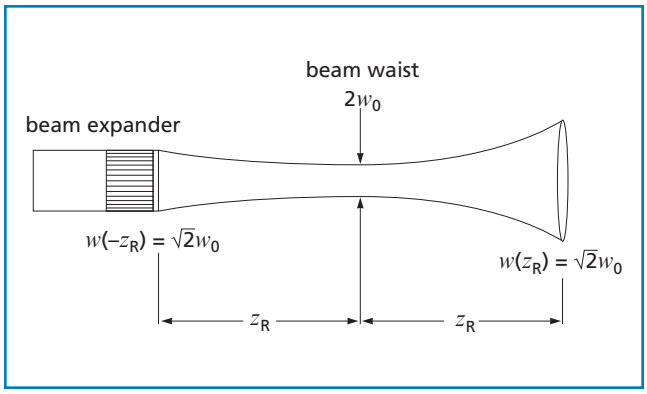

Figure 2.6 **Focusing a beam expander to minimize beam radius and spread over a specified distance**

$w(z)$ to w_0] over the distance z. For $z = 100$ m and $\lambda = 632.8$ nm, w_0 (optimum) = 4.48 mm (see example above). If we put this value for w_0 (optimum) back into the expression for $w(z)$,

$$w(z) = \sqrt{2}(w_0) \tag{2.11}$$

Thus, for this example,

$$w(100) = \sqrt{2}(4.48) = 6.3 \text{ mm}$$

By turning this previous equation around, we find that we once again have the Rayleigh range (z_R), over which the beam radius spreads by a factor of $\sqrt{2}$ as

$$z_R = \frac{\pi w_0^2}{\lambda}$$

with

$$w(z_R) = \sqrt{2}w_0.$$

If we use beam-expanding optics that allow us to adjust the position of the beam waist, we can actually double the distance over which beam divergence is minimized, as illustrated in figure 2.6. By focusing the beam-expanding optics to place the beam waist at the midpoint, we can restrict beam spread to a factor of $\sqrt{2}$ over a distance of $2z_R$, as opposed to just z_R.

This result can now be used in the problem of finding the starting beam radius that yields the minimum beam diameter and beam spread over 100 m. Using $2(z_R) = 100$ m, or $z_R = 50$ m, and $\lambda = 632.8$ nm, we get a value of $w(z_R) = (2\lambda/\pi)^{1/2} = 4.5$ mm, and $w_0 = 3.2$ mm. Thus, the optimum starting beam radius is the same as previously calculated. However, by focusing the expander we achieve a final beam radius that is no larger than our starting beam radius, while still maintaining the $\sqrt{2}$ factor in overall variation.

Alternately, if we started off with a beam radius of 6.3 mm, we could focus the expander to provide a beam waist of $w_0 = 4.5$ mm at 100 m, and a final beam radius of 6.3 mm at 200 m.

APPLICATION NOTE

Location of the beam waist

The location of the beam waist is required for most Gaussian-beam calculations. CVI Melles Griot lasers are typically designed to place the beam waist very close to the output surface of the laser. If a more accurate location than this is required, our applications engineers can furnish the precise location and tolerance for a particular laser model.

Do you need . . .

BEAM EXPANDERS

CVI Melles Griot offers a range of precision beam expanders for better performance than can be achieved with the simple lens combinations shown here.

Transformation and Magnification by Simple Lenses

It is clear from the previous discussion that Gaussian beams transform in an unorthodox manner. Siegman uses matrix transformations to treat the general problem of Gaussian beam propagation with lenses and mirrors. A less rigorous, but in many ways more insightful, approach to this problem was developed by Self (S. A. Self, "Focusing of Spherical Gaussian Beams"). Self shows a method to model transformations of a laser beam through simple optics, under paraxial conditions, by calculating the Rayleigh range and beam waist location following each individual optical element. These parameters are calculated using a formula analogous to the well-known standard lens-maker's formula.

The standard lens equation is written as

$$\frac{1}{s/f}+\frac{1}{s''/f}=1. \qquad (2.12)$$

where s is the object distance, s'' is the image distance, and f is the focal length of the lens. For Gaussian beams, Self has derived an analogous formula by assuming that the waist of the input beam represents the object, and the waist of the output beam represents the image. The formula is expressed in terms of the Rayleigh range of the input beam.

In the regular form,

$$\frac{1}{s+z_R^2/(s-f)}+\frac{1}{s''}=\frac{1}{f} \qquad (2.13)$$

or, in dimensionless form,

$$\frac{1}{(s/f)+(z_R/f)^2/(s/f-1)}+\frac{1}{(s''/f)}=1. \qquad (2.14)$$

In the far-field limit as z/R approaches 0 this reduces to the geometric optics equation. A plot of s/f versus s''/f for various values of z/R/f is shown in figure 2.7. For a positive thin lens, the three distinct regions of interest correspond to real object and real image, real object and virtual image, and virtual object and real image.

The main differences between Gaussian beam optics and geometric optics, highlighted in such a plot, can be summarized as follows:

- There is a maximum and a minimum image distance for Gaussian beams.
- The maximum image distance occurs at $s=f+z$/R, rather than at $s=f$.
- There is a common point in the Gaussian beam expression at $s/f=s''/f=1$. For a simple positive lens, this is the point at which the incident beam has a waist at the front focus and the emerging beam has a waist at the rear focus.
- A lens appears to have a shorter focal length as z/R/f increases from zero (i.e., there is a Gaussian focal shift).

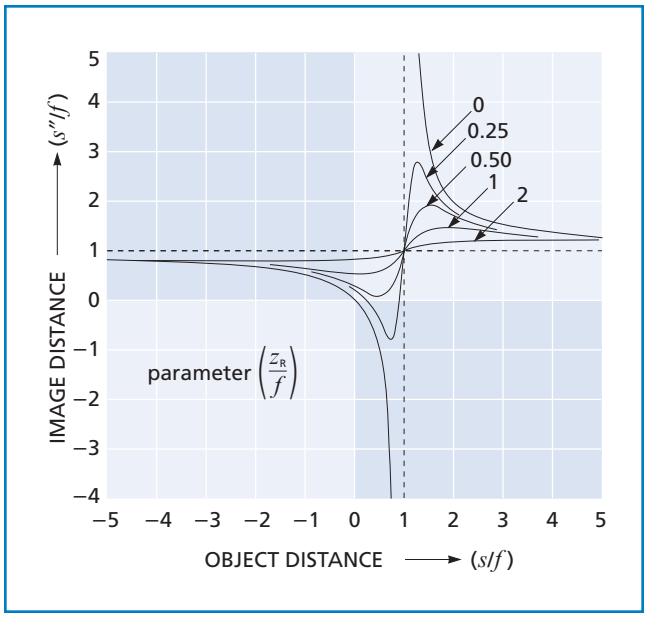

Figure 2.7 **Plot of lens formula for Gaussian beams with normalized Rayleigh range of the input beam as the parameter**

Self recommends calculating z_R, w_0, and the position of w_0 for each optical element in the system in turn so that the overall transformation of the beam can be calculated. To carry this out, it is also necessary to consider magnification: w_0''/w_0. The magnification is given by

$$m=\frac{w_0''}{w_0}=\frac{1}{\sqrt{\left\{\left[1-(s/f)\right]^2+(z_R/f)^2\right\}}}. \qquad (2.15)$$

The Rayleigh range of the output beam is then given by

$$z_R''=m^2 z_R\,. \qquad (2.16)$$

All the above formulas are written in terms of the Rayleigh range of the input beam. Unlike the geometric case, the formulas are not symmetric with respect to input and output beam parameters. For back tracing beams, it is useful to know the Gaussian beam formula in terms of the Rayleigh range of the output beam:

$$\frac{1}{s}+\frac{1}{s''+z_R''^2/(s''-f)}=\frac{1}{f}\,. \qquad (2.17)$$

BEAM CONCENTRATION

The spot size and focal position of a Gaussian beam can be determined from the previous equations. Two cases of particular interest occur when $s = 0$ (the input waist is at the first principal surface of the lens system) and $s = f$ (the input waist is at the front focal point of the optical system). For $s = 0$, we get

$$s'' = \frac{f}{1+\left(\lambda f / \pi w_0^2\right)^2} \tag{2.18}$$

and

$$w = \frac{\lambda f / \pi w_0}{\left[1+\left(\lambda f / \pi w_0^2\right)^2\right]^{1/2}} \tag{2.19}$$

For the case of $s=f$, the equations for image distance and waist size reduce to the following:

$$s'' = f$$

and

$$w = \lambda f / \pi w_0.$$

Substituting typical values into these equations yields nearly identical results, and for most applications, the simpler, second set of equations can be used.

In many applications, a primary aim is to focus the laser to a very small spot, as shown in figure 2.8, by using either a single lens or a combination of several lenses.

If a particularly small spot is desired, there is an advantage to using a well-corrected high-numerical-aperture microscope objective to concentrate the laser beam. The principal advantage of the microscope objective over a simple lens is the diminished level of spherical aberration. Although microscope objectives are often used for this purpose, they are not always designed for use at the infinite conjugate ratio. Suitably optimized lens systems, known as infinite conjugate objectives, are more effective in beam-concentration tasks and can usually be identified by the infinity symbol on the lens barrel.

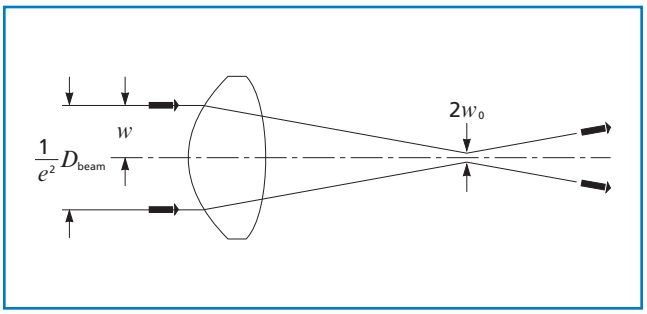

Figure 2.8 **Concentration of a laser beam by a laser-line focusing singlet**

DEPTH OF FOCUS

Depth of focus ($\pm\Delta z$), that is, the range in image space over which the focused spot diameter remains below an arbitrary limit, can be derived from the formula

$$w(z) = w_0\left[1+\left(\frac{\lambda z}{\pi w_0^2}\right)^2\right]^{1/2}.$$

The first step in performing a depth-of-focus calculation is to set the allowable degree of spot size variation. If we choose a typical value of 5 percent, or $w(z)_0 = 1.05w_0$, and solve for $z = \Delta z$, the result is

$$\Delta z \approx \pm\frac{0.32\pi w_0^2}{\lambda}.$$

Since the depth of focus is proportional to the square of focal spot size, and focal spot size is directly related to f-number (f/#), the depth of focus is proportional to the square of the f/# of the focusing system.

TRUNCATION

In a diffraction-limited lens, the diameter of the image spot is

$$d = K \times \lambda \times \mathrm{f}/\# \tag{2.20}$$

where K is a constant dependent on truncation ratio and pupil illumination, λ is the wavelength of light, and f/# is the speed of the lens at truncation. The intensity profile of the spot is strongly dependent on the intensity profile of the radiation filling the entrance pupil of the lens. For uniform pupil illumination, the image spot takes on the Airy disc intensity profile shown in figure 2.9.

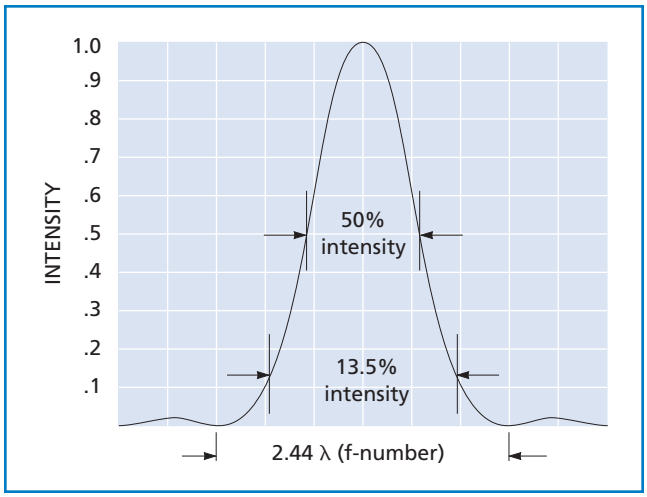

Figure 2.9 **Airy disc intensity distribution at the image plane**

If the pupil illumination is Gaussian in profile, the result is an image spot of Gaussian profile, as shown in figure 2.10.

When the pupil illumination is between these two extremes, a hybrid intensity profile results.

In the case of the Airy disc, the intensity falls to zero at the point $d_{zero} = 2.44 \times \lambda \times$ f/#, defining the diameter of the spot. When the pupil illumination is not uniform, the image spot intensity never falls to zero making it necessary to define the diameter at some other point. This is commonly done for two points:

d_{FWHM} = 50-percent intensity point

and

d_{1/e^2} = 13.5% intensity point.

It is helpful to introduce the truncation ratio

$$T = \frac{D_b}{D_t} \tag{2.21}$$

where D_b is the Gaussian beam diameter measured at the $1/e^2$ intensity point, and D_t is the limiting aperture diameter of the lens. If $T = 2$, which approximates uniform illumination, the image spot intensity profile approaches that of the classic Airy disc. When $T = 1$, the Gaussian profile is truncated at the $1/e^2$ diameter, and the spot profile is clearly a hybrid between an Airy pattern and a Gaussian distribution. When $T = 0.5$, which approximates the case for an untruncated Gaussian input beam, the spot intensity profile approaches a Gaussian distribution.

Calculation of spot diameter for these or other truncation ratios requires that K be evaluated. This is done by using the formulas

$$K_{FWHM} = 1.029 + \frac{0.7125}{(T - 0.2161)^{2.179}} - \frac{0.6445}{(T - 0.2161)^{2.221}} \tag{2.22}$$

and

$$K_{1/e^2} = 1.6449 + \frac{0.6460}{(T - 0.2816)^{1.821}} - \frac{0.5320}{(T - 0.2816)^{1.891}}. \tag{2.23}$$

The K function permits calculation of the on-axis spot diameter for any beam truncation ratio. The graph in figure 2.11 plots the K factor vs $T(D_b/D_t)$.

The optimal choice for truncation ratio depends on the relative importance of spot size, peak spot intensity, and total power in the spot as demonstrated in the table below. The total power loss in the spot can be calculated by using

$$P_L = e^{-2(D_t/D_b)^2} \tag{2.24}$$

for a truncated Gaussian beam. A good compromise between power loss and spot size is often a truncation ratio of $T = 1$. When $T = 2$ (approximately uniform illumination), fractional power loss is 60 percent. When $T = 1$, d_{1/e^2} is just 8.0 percent larger than when $T = 2$, whereas fractional power loss is down to 13.5 percent. Because of this large savings in power with relatively little growth in the spot diameter, truncation ratios of 0.7 to 1.0 are typically used. Ratios as low as 0.5 might be employed when laser power must be conserved. However, this low value often wastes too much of the available clear aperture of the lens.

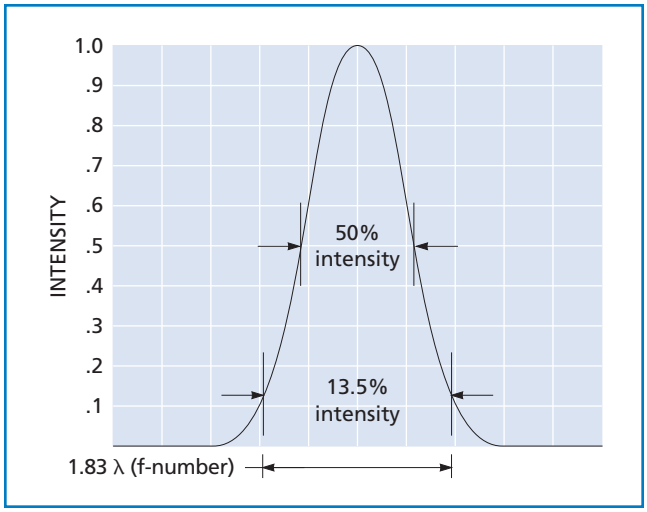

Figure 2.10 **Gaussian intensity distribution at the image plane**

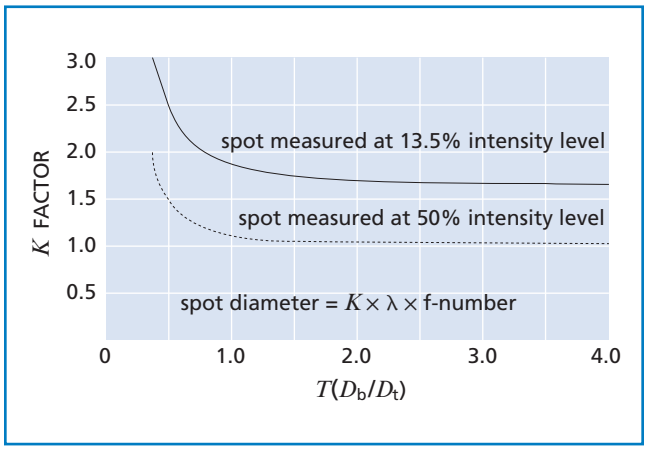

Figure 2.11 **K factors as a function of truncation ratio**

Spot Diameters and Fractional Power Loss for Three Values of Truncation

Truncation Ratio	d_{FWHM}	d_{1/e^2}	d_{zero}	P_L(%)
Infinity	1.03	1.64	2.44	100
2.0	1.05	1.69	—	60
1.0	1.13	1.83	—	13.5
0.5	1.54	2.51	—	0.03

SPATIAL FILTERING

Laser light scattered from dust particles residing on optical surfaces may produce interference patterns resembling holographic zone planes. Such patterns can cause difficulties in interferometric and holographic applications where they form a highly detailed, contrasting, and confusing background that interferes with desired information. Spatial filtering is a simple way of suppressing this interference and maintaining a very smooth beam irradiance distribution. The scattered light propagates in different directions from the laser light and hence is spatially separated at a lens focal plane. By centering a small aperture around the focal spot of the direct beam, as shown in figure 2.12, it is possible to block scattered light while allowing the direct beam to pass unscathed. The result is a cone of light that has a very smooth irradiance distribution and can be refocused to form a collimated beam that is almost uniformly smooth.

As a compromise between ease of alignment and complete spatial filtering, it is best that the aperture diameter be about two times the $1/e^2$ beam contour at the focus, or about 1.33 times the 99% throughput contour diameter.

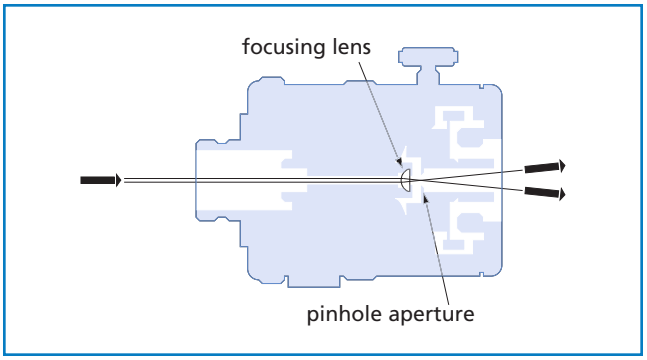

Figure 2.12 **Spatial filtering smoothes the irradiance distribution**

Do you need . . .

SPATIAL FILTERS

CVI Melles Griot offers 3-axis spatial filters with precision micrometers (07 SFM 201 and 07 SFM 701). These devices feature an open-design that provides access to the beam as it passes through the instrument. The spatial filter consists of a precision, differential-micrometer y-z stage, which controls the pinhole location, and a single-axis translation stage for the focusing lens. The spatial filter mount accepts LSL-series focusing optics, OAS-series microscope objectives, and PPM-series mounted pinholes.

The precision individual pinholes are for general-purpose spatial filtering. The high-energy laser precision pinholes are constructed specifically to withstand irradiation from high-energy lasers.

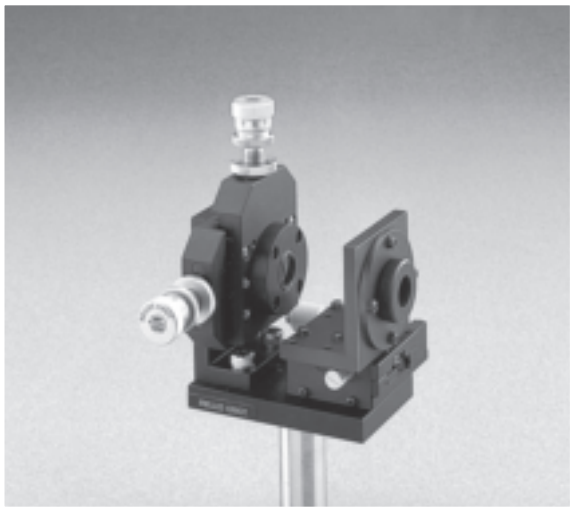

Real Beam Propagation

In the real world, truly Gaussian laser beams are very hard to find. Low-power beams from helium neon lasers can be a close approximation, but the higher the power of the laser is, the more complex the excitation mechanism (e.g., transverse discharges, flash-lamp pumping), and the higher the order of the mode is, the more the beam deviates from the ideal.

To address the issue of non-Gaussian beams, a beam quality factor, M^2, has come into general use.

For a typical helium neon laser operating in TEM_{00} mode, M^2 <1.1. Ion lasers typically have an M^2 factor ranging from 1.1 to 1.7. For high-energy multimode lasers, the M^2 factor can be as high as 10 or more. In all cases, the M^2 factor affects the characteristics of a laser beam and cannot be neglected in optical designs, and truncation, in general, increases the M^2 factor of the beam.

In Laser Modes, we will illustrate the higher-order eigensolutions to the propagation equation, and in The Propagation Constant, M^2 will be defined. The section Incorporating M^2 into the Propagation Equations defines how non-Gaussian beams propagate in free space and through optical systems.

LASER MODES

The fundamental TEM_{00} mode is only one of many transverse modes that satisfy the round-trip propagation criteria described in Gaussian Beam Propagation. Figure 2.13 shows examples of the primary lower-order Hermite-Gaussian (rectangular) solutions to the propagation equation.

Note that the subscripts n and m in the eigenmode TEM_{nm} are correlated to the number of nodes in the x and y directions. In each case, adjacent lobes of the mode are 180 degrees out of phase.

The propagation equation can also be written in cylindrical form in terms of radius (ρ) and angle (ϕ). The eigenmodes ($E_{\rho\phi}$) for this equation are a series of axially symmetric modes, which, for stable resonators, are closely approximated by Laguerre-Gaussian functions, denoted by $TEM_{\rho\phi}$. For the lowest-order mode, TEM_{00}, the Hermite-Gaussian and Laguerre-Gaussian functions are identical, but for higher-order modes, they differ significantly, as shown in figure 2.14.

The mode, TEM_{01}, also known as the "bagel" or "doughnut" mode, is considered to be a superposition of the Hermite-Gaussian TEM_{10} and TEM_{01} modes, locked in phase quadrature. In real-world lasers, the Hermite-Gaussian modes predominate since strain, slight misalignment, or contamination on the optics tends to drive the system toward rectangular coordinates. Nonetheless, the Laguerre-Gaussian TEM_{10} "target" or "bulls-eye" mode is clearly observed in well-aligned gas-ion and helium neon lasers with the appropriate limiting apertures.

THE PROPAGATION CONSTANT

The propagation of a pure Gaussian beam can be fully specified by either its beam waist diameter or its far-field divergence. In principle, full characterization of a beam can be made by simply measuring the waist diameter, $2w_0$, or by measuring the diameter, $2w(z)$, at a known and specified distance (z) from the beam waist, using the equations

$$w(z) = w_0\left[1+\left(\frac{\lambda z}{\pi w_0^2}\right)^2\right]^{1/2}$$

and

$$R(z) = z\left[1+\left(\frac{\pi w_0^2}{\lambda z}\right)^2\right]$$

where λ is the wavelength of the laser radiation, and $w(z)$ and $R(z)$ are the beam radius and wavefront radius, respectively, at distance z from the beam waist. In practice, however, this approach is fraught with problems—it is extremely difficult, in many instances, to locate the beam waist; relying on a single-point measurement is inherently inaccurate; and, most important, pure Gaussian laser beams do not exist in the real world. The beam from a well-controlled helium neon laser comes very close, as does the beam from a few other gas lasers. However, for most lasers (even those

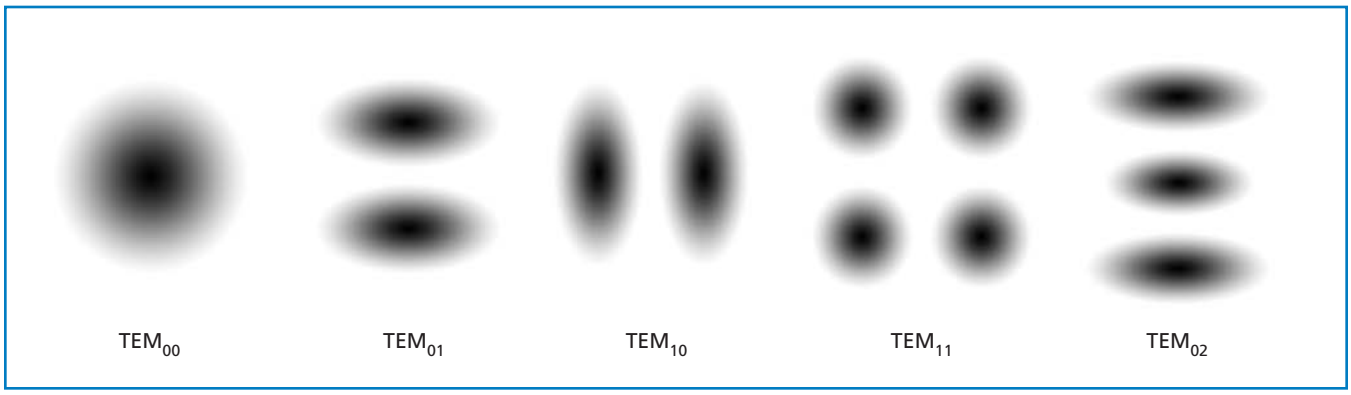

Figure 2.13 **Low-order Hermite-Gaussian resonator modes**

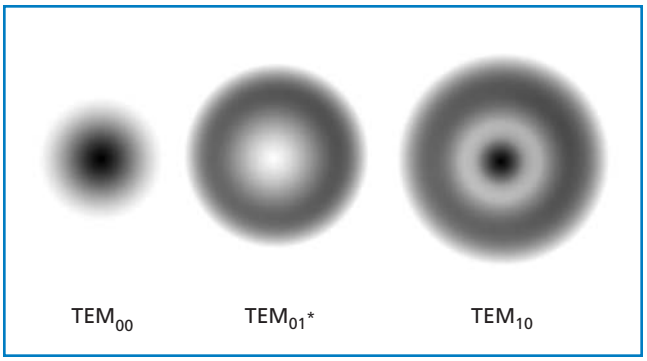

Figure 2.14 **Low-order axisymmetric resonator modes**

specifying a fundamental TEM_{00} mode), the output contains some component of higher-order modes that do not propagate according to the formula shown above. The problems are even worse for lasers operating in high-order modes.

The need for a figure of merit for laser beams that can be used to determine the propagation characteristics of the beam has long been recognized. Specifying the mode is inadequate because, for example, the output of a laser can contain up to 50 percent higher-order modes and still be considered TEM_{00}.

The concept of a dimensionless beam propagation parameter was developed in the early 1970s to meet this need, based on the fact that, for any given laser beam (even those not operating in the TEM_{00} mode) the product of the beam waist radius (w_0) and the far-field divergence (θ) are constant as the beam propagates through an optical system, and the ratio

$$M^2 = \frac{w_{0R}\,\theta_R}{w_0\,\theta} \qquad (2.25)$$

where w_{0R} and θ_R, the beam waist and far-field divergence of the real beam, respectively, is an accurate indication of the propagation characteristics of the beam. For a true Gaussian beam, $M^2 = 1$.

EMBEDDED GAUSSIAN

The concept of an "embedded Gaussian," shown in figure 2.15, is useful as a construct to assist with both theoretical modeling and laboratory measurements.

A mixed-mode beam that has a waist M (not M^2) times larger than the embedded Gaussian will propagate with a divergence M times greater than the embedded Gaussian. Consequently the beam diameter of the mixed-mode beam will always be M times the beam diameter of the embedded Gaussian, but it will have the same radius of curvature and the same Rayleigh range ($z = R$).

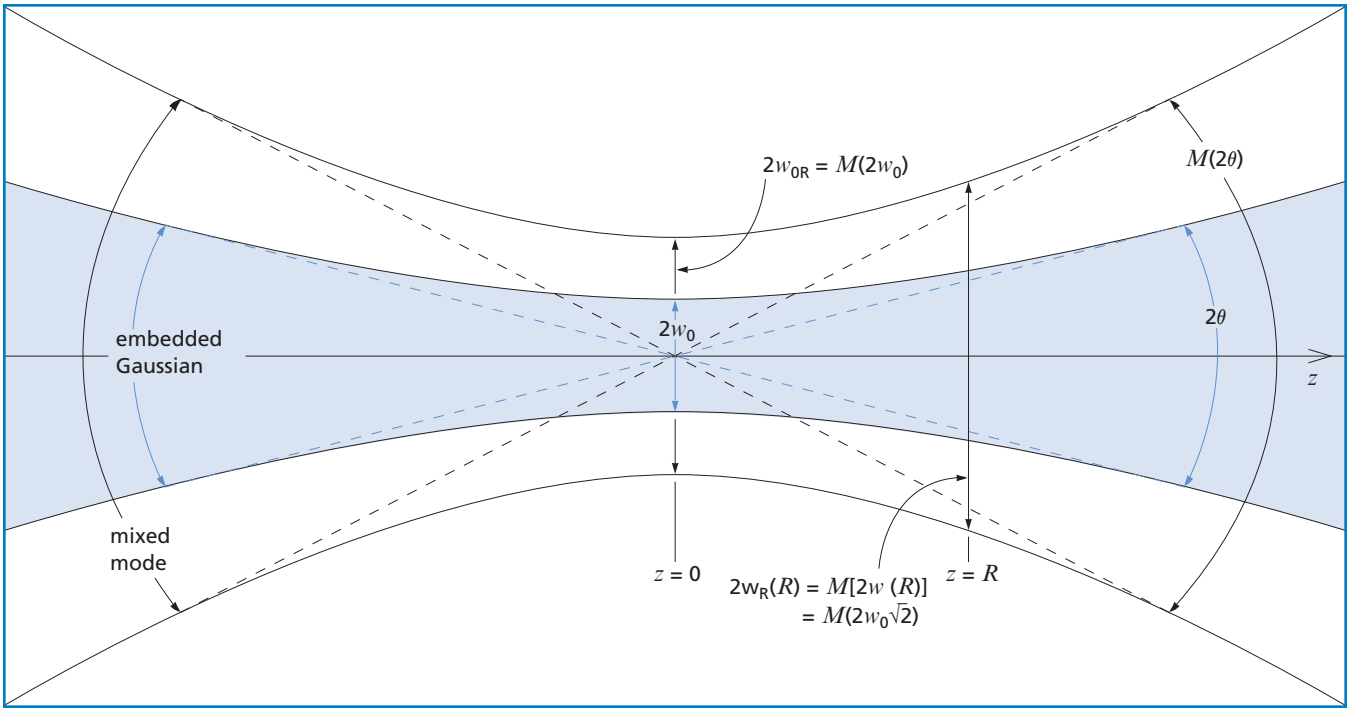

Figure 2.15 **The embedded Gaussian**

Incorporating M^2 Into the Propagation Equations

In the previous section we defined the propagation constant M^2

$$M^2 = \frac{w_{0R}\,\theta_R}{w_0\,\theta}$$

where w_{0R} and θ_R are the beam waist and far-field divergence of the real beam, respectively.

For a pure Gaussian beam, $M^2 = 1$, and the beam-waist beam-divergence product is given by

$$w_0\theta = \lambda/\pi$$

It follows then that for a real laser beam,

$$w_{0R}\,\theta_R = \frac{M^2\lambda}{\pi} > \frac{\lambda}{\pi} \qquad (2.26)$$

The propagation equations for a real laser beam are now written as

$$w_R(z) = w_{0R}\left[1+\left(\frac{z\lambda M^2}{\pi w_{0R}^{\;2}}\right)^2\right]^{1/2} \qquad (2.27)$$

and

$$R_R(z) = z\left[1+\left(\frac{\pi w_{0R}^{\;2}}{z\lambda M^2}\right)^2\right] \qquad (2.28)$$

where $w_R(z)$ and $R_R(z)$ are the $1/e^2$ intensity radius of the beam and the beam wavefront radius at z, respectively.

The equation for w_0(optimum) now becomes

$$w_0(\text{optimum}) = \left(\frac{\lambda z M^2}{\pi}\right)^{1/2} \qquad (2.29)$$

The definition for the Rayleigh range remains the same for a real laser beam and becomes

$$z_R = \frac{\pi w_{0R}^{\;2}}{M^2\lambda} \qquad (2.30)$$

For $M^2 = 1$, these equations reduce to the Gaussian beam propagation equations .

$$R(z) = z\left[1+\left(\frac{\pi w_0^2}{\lambda z}\right)^2\right]$$

and

$$w(z) = w_0\left[1+\left(\frac{\lambda z}{\pi w_0^2}\right)^2\right]^{1/2}$$

In a like manner, the lens equation can be modified to incorporate M^2. The standard equation becomes

$$\frac{1}{s+\left(z_R/M^2\right)^2/(s-f)} + \frac{1}{s''} = \frac{1}{f} \qquad (2.31)$$

and the normalized equation transforms to

$$\frac{1}{(s/f)+\left(z_R/M^2 f\right)^2/(s/f-1)} + \frac{1}{(s''/f)} = 1. \qquad (2.32)$$

Do you need . . .

CVI Melles Griot Lasers and Laser Accessories

CVI Melles Griot manufactures many types of lasers and laser systems for laboratory and OEM applications. Laser types include helium neon (HeNe) and helium cadmium (HeCd) lasers, argon, krypton, and mixed gas (argon/krypton) ion lasers; diode lasers and diode-pumped solid-state (DPSS) lasers. CVI Melles Griot also offers a range of laser accessories including laser beam expanders, generators, laser-line collimators, spatial filters and shear-plate collimation testers.

Lens Selection

The most important relationships that we will use in the process of lens selection for Gaussian-beam optical systems are focused spot radius and beam propagation.

Focused Spot Radius

$$w_F = \frac{\lambda f M^2}{\pi w_L} \qquad (2.33)$$

where w_F is the spot radius at the focal point, and w_L is the radius of the collimated beam at the lens. M^2 is the quality factor (1.0 for a theoretical Gaussian beam).

Beam Propagation

$$w_R(z) = w_{0R}\left[1+\left(\frac{z\lambda M^2}{\pi w_{0R}^2}\right)^2\right]^{1/2}$$

and

$$R_R(z) = z\left[1+\left(\frac{\pi w_{0R}^2}{z\lambda M^2}\right)^2\right]$$

and

$$w_0(\text{optimum}) = \left(\frac{\lambda z M^2}{\pi}\right)^{1/2}$$

where w_{0R} is the radius of a real (non-Gaussian) beam at the waist, and $w_R(z)$ is the radius of the beam at a distance z from the waist. For $M^2 = 1$, the formulas reduce to that for a Gaussian beam. w_0(optimum) is the beam waist radius that minimizes the beam radius at distance z, and is obtained by differentiating the previous equation with respect to distance and setting the result equal to zero.

Finally,

$$z_R = \frac{\pi w_0^2}{\lambda}$$

where z_R is the Raleigh range.

We can also utilize the equation for the approximate on-axis spot size caused by spherical aberration for a plano-convex lens at the infinite conjugate:

$$\text{spot diameter } (3^{\text{rd}}\text{-order spherical aberration}) = \frac{0.067 f}{(f/\#)^3}$$

This formula is for uniform illumination, not a Gaussian intensity profile. However, since it yields a larger value for spot size than actually occurs, its use will provide us with conservative lens choices. Keep in mind that this formula is for spot diameter whereas the Gaussian beam formulas are all stated in terms of spot radius.

EXAMPLE: OBTAIN AN 8-MM SPOT AT 80 M

Using the CVI Melles Griot HeNe laser 25 LHR 151, produce a spot 8 mm in diameter at a distance of 80 m, as shown in figure 2.16

The CVI Melles Griot 25 LHR 151 helium neon laser has an output beam radius of 0.4 mm. Assuming a collimated beam, we use the propagation formula

$$w_0(\text{optimum}) = \left(\frac{\lambda z M^2}{\pi}\right)^{1/2}$$

to determine the spot size at 80 m:

$$w(80\text{ m}) = 0.4\left[1+\left(\frac{0.6328\times10^{-3}\times 80{,}000}{\pi\left(0.4^2\right)}\right)^2\right]^{1/2}$$

$$= 40.3\text{-mm beam radius}$$

or 80.6-mm beam diameter. This is just about exactly a factor of 10 larger than we wanted. We can use the formula for w_0 (optimum) to determine the smallest collimated beam diameter we could achieve at a distance of 80 m:

$$w_0(\text{optimum}) = \left(\frac{0.6328\times10^{-3}\times\ 80{,}000}{\pi}\right)^{1/2} = 4.0\text{ mm.}$$

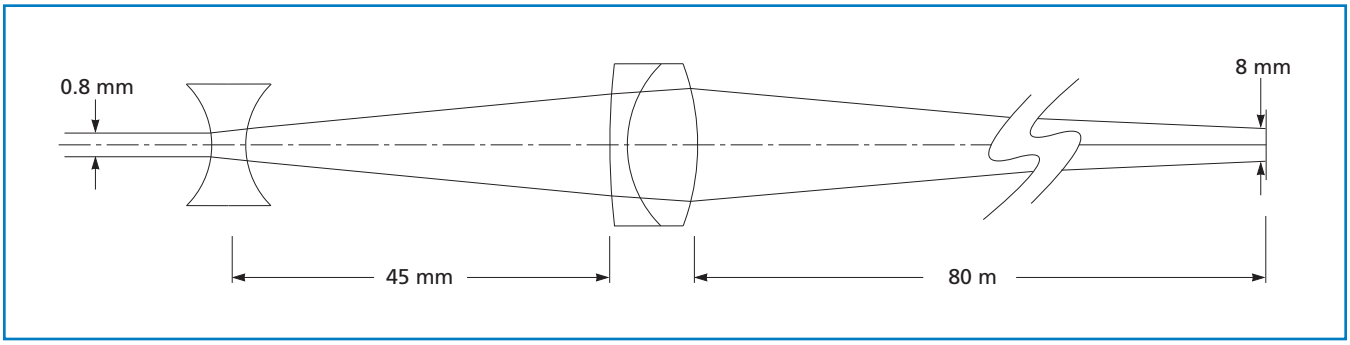

Figure 2.16 **Lens spacing adjusted empirically to achieve an 8-mm spot size at 80 m**

This tells us that if we expand the beam by a factor of 10 (4.0 mm/0.4 mm), we can produce a collimated beam 8 mm in diameter, which, if focused at the midpoint (40 m), will again be 8 mm in diameter at a distance of 80 m. This 10 × expansion could be accomplished most easily with one of the CVI Melles Griot beam expanders, such as the 09 LBX 003 or 09 LBM 013. However, if there is a space constraint and a need to perform this task with a system that is no longer than 50 mm, this can be accomplished by using catalog components.

Figure 2.17 illustrates the two main types of beam expanders.

The Keplerian type consists of two positive lenses, which are positioned with their focal points nominally coincident. The Galilean type consists of a negative diverging lens, followed by a positive collimating lens, again positioned with their focal points nominally coincident. In both cases, the overall length of the optical system is given by

$$\text{overall length} = f_1 + f_2$$

and the magnification is given by

$$\text{magnification} = \frac{f_2}{f_1}$$

where a negative sign, in the Galilean system, indicates an inverted image (which is unimportant for laser beams). The Keplerian system, with its internal point of focus, allows one to utilize a spatial filter, whereas the Galilean system has the advantage of shorter length for a given magnification.

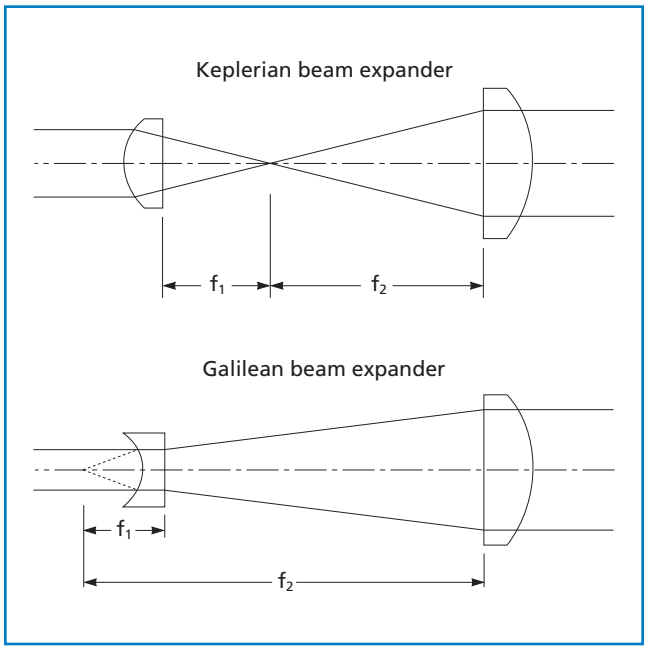

Figure 2.17 **Two main types of beam expanders**

In order to determine necessary focal lengths for an expander, we need to solve these two equations for the two unknowns.

In this case, using a negative value for the magnification will provide us with a Galilean expander. This yields values of $f_2 = 55.5$ mm] and $f_1 = 45.5$ mm.

$$f_1 + f_2 = 50 \text{ mm}$$

and

$$\frac{f_2}{f_1} = -10.$$

Ideally, a plano-concave diverging lens is used for minimum spherical aberration, but the shortest catalog focal length available is -10 mm. There is, however, a biconcave lens with a focal length of 5 mm (LDK-5.0-5.5-C). Even though this is not the optimum shape lens for this application, the extremely short focal length is likely to have negligible aberrations at this f-number. Ray tracing would confirm this.

Now that we have selected a diverging lens with a focal length of 45 mm, we need to choose a collimating lens with a focal length of 50 mm. To determine whether a plano-convex lens is acceptable, check the spherical aberration formula.

The spot diameter resulting from spherical aberration is

$$\frac{0.067 \times 50}{6.25^3} = 14\ \mu\text{m}.$$

The spot diameter resulting from diffraction ($2w_o$) is

$$\frac{2\ (0.6328 \times 10^{-3})\ 50}{\pi 4.0} = 5\ \mu\text{m}.$$

Clearly, a plano-convex lens will not be adequate. The next choice would be an achromat, such as the LAO-50.0-18.0. The data in the spot size charts indicate that this lens is probably diffraction limited at this f-number. Our final system would therefore consist of the LDK-5.0-5.5-C spaced about 45 mm from the LAO-50.0-18.0, which would have its flint element facing toward the laser.

References

A. Siegman. Lasers *(Sausalito, CA: University Science Books, 1986).*

S. A. Self. "Focusing of Spherical Gaussian Beams." Appl. Opt. *22, no. 5 (March 1983): 658.*

H. Sun. "Thin Lens Equation for a Real Laser Beam with Weak Lens Aperture Truncation." Opt. Eng. *37, no. 11 (November 1998).*

R. J. Freiberg, A. S. Halsted. "Properties of Low Order Transverse Modes in Argon Ion Lasers." Appl. Opt. *8, no. 2 (February 1969): 355-362.*

*W. W. Rigrod. "Isolation of Axi-Symmetric Optical-Resonator Modes."*Appl. Phys. *Let. 2, no. 3 (February 1963): 51-53.*

M. Born, E. Wolf. Principles of Optics *Seventh Edition (Cambridge, UK: Cambridge University Press, 1999).*