Fundamentals of Positioning

8

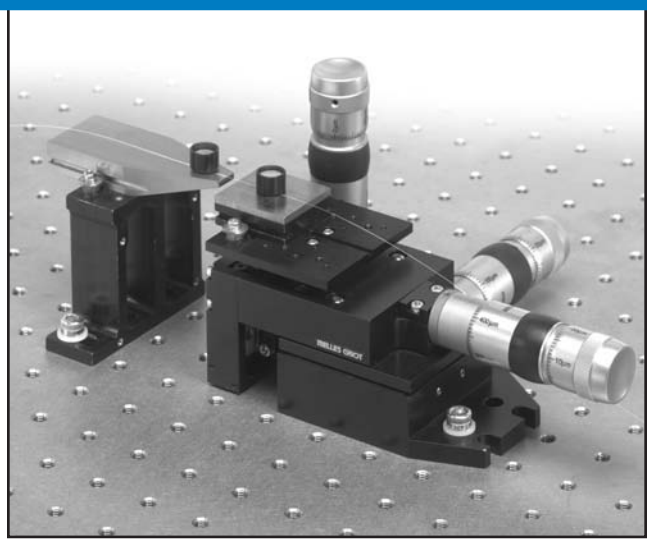

Introduction	**8.2**
Performance Parameters and Error Sources for Translation Stages	**8.3**
Mechanisms of Positioning	**8.5**
Multiaxis Assemblies	**8.8**
Mechanical Drives	**8.9**
Piezoelectric Drives	**8.13**
Nanometric Positioning Technology	**8.17**
Automated Alignment	**8.21**

Introduction

In many industrial and scientific applications it is necessary to constrain the motion of an object with respect to a reference, such as a straight line, to a great degree of precision. High-precision translation and rotation stages are necessary tools for such applications.

Precision is a relative term and, for different applications, different levels of performance and thus different types of mechanisms are required. The design goals for these mechanisms involve providing the most accurate desired path of translation with the highest possible load capacity and the lowest possible friction. Typically, designers of precision positioning tools employ dovetails, ball bearings, and roller bearings as the mechanism. For high-resolution positioning applications, such as fiber alignment, flexure mechanisms are commonly used.

Each type of mechanism is designed for a specific set of applications, and what is ideal for one type of experiment might be inappropriate for another. For example, a dovetail bearing might have the load capacity to position a large collimator but not the resolution to align two optical fibers. In contrast, a flexure stage might have the resolution for fiber alignment but not the range for focusing a lens.

Drive mechanisms, also designed for specific applications, are used to move the component on a positioning stage to its desired location. Three basic types of drives are used: manual, stepper-motor, and piezoelectric. Manual drives and stepper-motor drives can move components over long distances in contrast to piezoelectric transducers which move components over very short distances with high resolution.

An understanding of the types of positioning and drive mechanisms with their capabilities is critical to selecting the best positioning system for an application. These topics are described in the following sections.

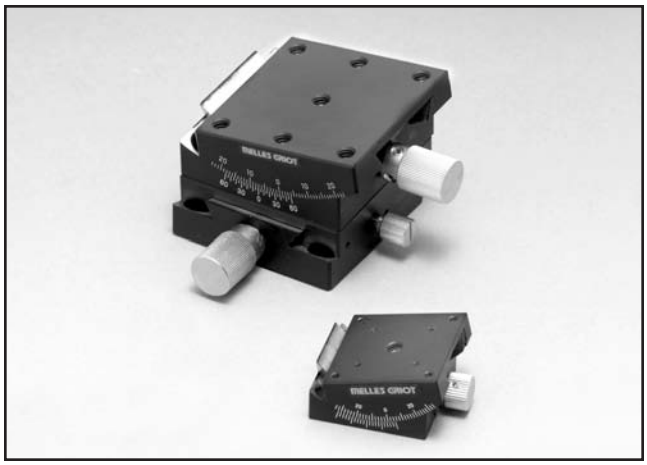

Goniometric stages with dovetail mechanism

Three-axis stage with flexure mechanism

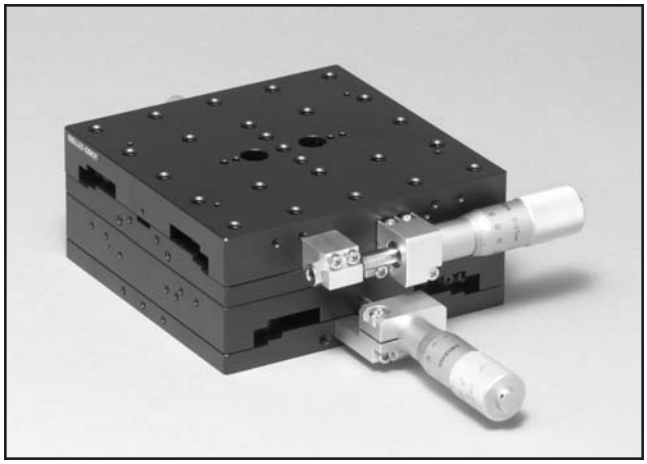

Linear translation stages with roller-bearing mechanisms

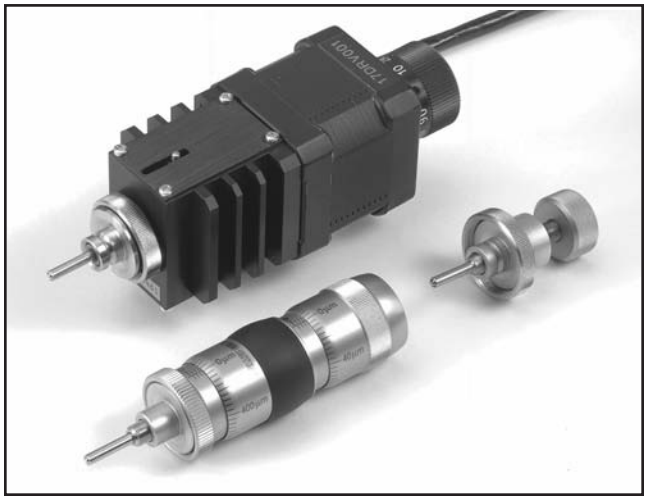

Manual and stepper-motor drives

Performance Parameters and Error Sources for Translation Stages

Movement along a single plane—vertical, horizontal, or even rotational—is called translation. There are several ways to move a stage or platform in this manner.

Horizontal translation stages are designed specifically to move components in a single, linear direction that is nominally perpendicular to gravitational force. Vertical translation stages are designed specifically to move components in a linear direction that is nominally parallel to gravitational force.

Vertical translation (elevation) can be accomplished in several ways. For example, horizontal stages may be mounted with an "L" bracket and used in place of a vertical stage, but in this case performance may be compromised. The most popular precision vertical translator is shown in figure 8.1. It uses a micrometer to drive a pivoting cam. This cam takes the horizontal motion of the micrometer and converts it to a vertical motion. The cam lifts a top plate which is constrained by a bearing assembly to travel only vertically. The component that needs to be moved is mounted on the top plate.

FLATNESS, STRAIGHTNESS, AND UNCERTAINTY

With a translation stage, any deviation from purely linear motion introduces positioning error. The three major types of error in a horizontal translation stage are illustrated in figure 8.2.

Flatness is a term used to refer to the variation in the vertical (z) direction over the length of travel. The variation may come from machining inaccuracies in the bearing structure, dirt and contamination, or arcuate motion.

Straightness is defined as the variation in the horizontal (y) direction over the length of travel. This variation may result from bending and misalignment of the bearing ways, in addition to the causes mentioned above.

Position uncertainty is caused by various sources, including backlash, friction, and stiction. Increasing the amount of friction, by applying additional load to the device, will likewise decrease resolution and increase the degree of position uncertainty in most positioners.

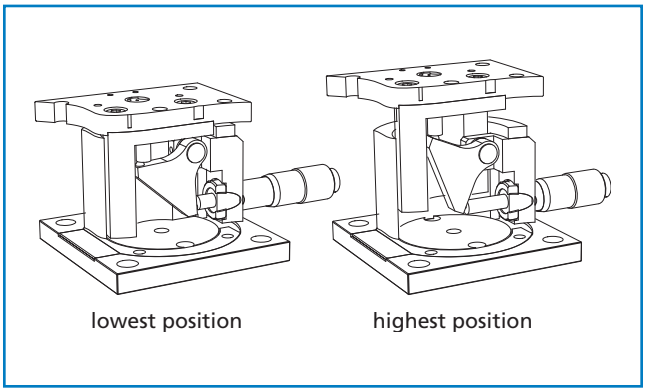

Figure 8.1 **Micrometer- and cam-driven vertical (z-axis) stage**

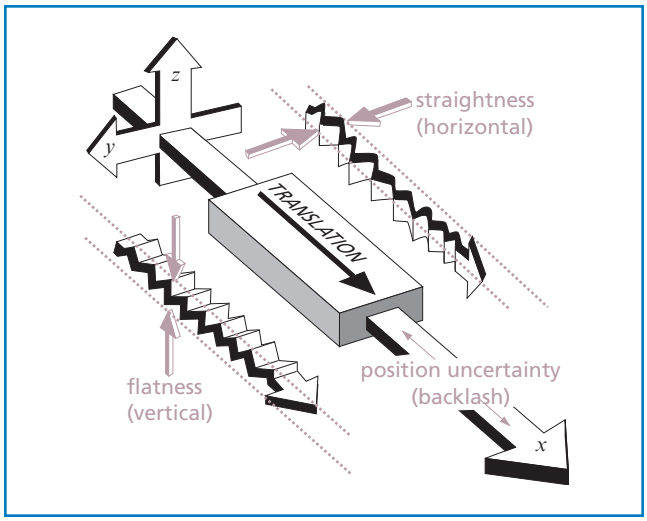

Figure 8.2 **Major sources of error in a horizontal translation stage**

ACCURACY

Accuracy is the absolute deviation between desired and actual position. Ideally, motion is constrained to just one axis in a translation stage. Any deviation is caused by way assembly runout errors. These errors can result in translation in the y or z axes or rotation about θx (roll), θy (pitch), or θz (yaw). Errors in flatness (z-runout) and straightness (y-runout) are generally the consequence of underlying angular errors.

ANGULAR DEVIATION

Angular deviation, which is always present to some degree, can greatly affect the position of a component mounted to a stage. Pitch errors are common in bearing stages owing to the overhanging nature of the load at the two extremes of travel. This pitch error produces a corresponding runout error in the z axis.

REPEATABILITY

Repeatability is the error within which a given position can be reproduced. Unidirectional repeatability, measured by approaching a position from a single direction, hides errors caused by backlash and hysteresis effects. Bidirectional repeatability, measured by approaching a position from opposing directions, includes these effects and provides a more meaningful specification.

RESOLUTION

Resolution is defined as the smallest increment of movement that a stage can make. Resolution can be enhanced by using finer pitch micrometers or adjustment screws, using larger adjustment knobs, and minimizing friction and backlash. Meaningful resolution should be measured by motion of the

total stage system, not just the drive mechanism. Friction and stiction ultimately are the limiting factors in determining the degree of resolution. The lower the friction is the finer will be the degree of resolution that can be achieved. It follows that increasing the amount of friction on a positioner will adversely affect the degree of resolution.

ABBÉ ERROR

Abbé error, illustrated in figure 8.3, is the linear positional error caused by the combination of the axes of measurement being offset from the plane of motion and an angular error in that motion. Abbé error has the worst impact on linear positioning accuracy. Post-mounted components on translation stages typically experience an Abbé error which increases as the distance between stage bearings and the mounted component increases. An angular error in θy (pitch) of a stage will result in a positional error in y and an axis shift in z of a post-mounted component. Sources of Abbé error include way curvature, preload variation along a way, insufficient preload, contamination between the bearings and way surfaces, and torsional compliance caused by external forces acting on the load and overhanging components. Abbé error can be minimized by keeping the axis of measurement as close to the plane of motion as possible.

ARCUATE MOTION ERROR

This type of motion error occurs in stages where the design of the stage is based on a flexure mechanism. Typically, the flexure is fixed at one end while pressure is applied to it at the other. This means that the resulting displacement is actually associated with movement on a curved arc. In other words, any movement in a given plane will produce a secondary displacement in a direction that is perpendicular to the principal plane. In this case, as the moving platform is displaced in the longitudinal direction, it also tends to move toward the base of the fixed block. This undesirable displacement in the direction perpendicular to the intended direction of translation is referred to as the arcuate displacement or error.

COSINE ERROR

Cosine error is the result of an angular misalignment between the motion of the translation stage and that of the actuator (or other accuracy-determining component). The magnitude of the error, equal to the actuator travel times $(1 - \cos\theta)$ where θ is the actuator misalignment, has a negligible effect on the overall accuracy of the stage. For example, if a translation stage with 25 mm of travel has an actuator with a 1-degree misalignment, this results in an error of just 3.8 µm over the entire range of travel.

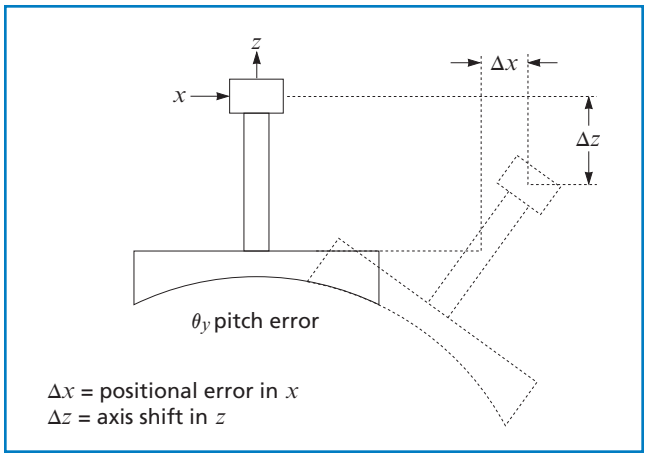

Figure 8.3 **Abbé error**

Components mounted on long posts experience the most Abbé error.

Mechanisms of Positioning

A key element of a translation stage is its bearing structure. The design goals for these mechanisms involve having the highest possible load capacity with the lowest possible amount of friction and the most accurate desired path. Since a single design could not meet all the goals at once, several different mechanisms have evolved. Traditional bearing designs for long-travel stages include dovetail slides, ball bearings, and crossed-roller bearings. Flexures are the best choice for short-travel ultrahigh precision positioning. All of these are discussed below.

DOVETAIL SLIDES

Dovetail slides (see figure 8.4) can be very simple and effective in systems requiring long travel and for applications involving heavy loads. They are less appropriate for high-precision systems because of their degree of resolution and precision. Stiction limits positional resolution and also provides a means whereby stored residual stress can be spontaneously released, causing creep and drift. Friction often imposes large forces upon the drive mechanism, exacerbating any stiction effects present in the drive. Finally, a dovetail slide depends on effective, whole-surface lubrication. The stage floats with a consequent lack of microscopic definition and is generally not suitable for high-precision applications.

BALL BEARINGS

Ball-bearing stages (see figure 8.5) replace the friction of sliding motion used in dovetail slides by a lower friction rolling motion. A linear array of spherical balls is held between V-grooves or rails with a cage that prevents adjacent balls from touching one another. To minimize wobble, the rails are forcefully preloaded to apply pressure uniformly along the bearing. Because there is a very small area of contact between the ball and rail, small microscopic bumps influence stage motion. To eliminate play and wobble, all small irregularities must be effectively smoothed out by applying preload.

Bearings require lubrication to prevent seizing and reduce friction and stiction, thereby minimizing metal-to-metal contact. The balls make point contact with the rails, limiting their load-bearing capacity. To be effective, preload must be fairly high. This leads to some problems: friction and stiction are increased, and the preload may be temperature dependent. With aging, the preload may relax, causing lubricant to leak from the balls and rail. If this type of stage is abused—for example if the stage is dropped from a height—the ball bearings will indent the rails, causing permanent damage. It is generally not recommended to use ball-bearing slides for high-load applications. Ball bearings with point loading do have significant advantages including relatively low cost and resistance to contamination. The bearings have a self-cleaning action whereby any tiny dirt or dust particles are simply pushed clear by the rolling and squeezing action of the ball bearings.

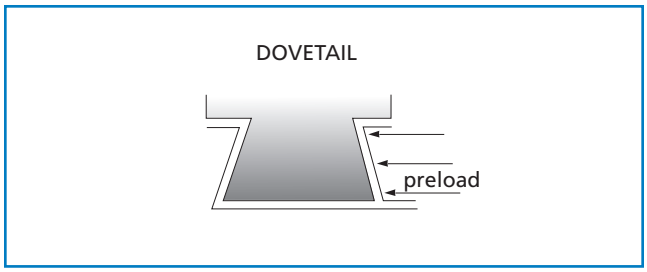

Figure 8.4 **Dovetail slide**

CROSSED-ROLLER BEARINGS

Crossed-roller bearing stages (see figure 8.6) replace balls with small cylindrical steel rollers. The rollers are held apart from one another by a cage to prevent adjacent rollers from touching. By having the axis of rotation alternate or cross at 90 degrees, the stage can be preloaded and will operate at any angle. Point loading of the ball bearing is changed to a line contact with the roller bearing. Thus, because of the larger load-bearing surfaces (line rather than point), crossed-roller bearings can have a higher preload applied, carry greater loads, and meet very tight run-out specifications. The line contact type of mechanism also makes them much more resistance to damage from shock loads. However, the ability of these bearings to accept higher preloads means that preloading setscrews are subjected to much higher stress. This increases the problem of long-term creep and relaxation of the preload clamping force. Also, higher load-bearing capacity is achieved at the expense of higher friction and stiction.

Unlike the case of the ball bearings and flexure type of motion mechanisms, contamination is a particular problem with crossed-roller bearings. Dirt is rolled over and trapped on the rollers and tracks, continuously building up and grinding into the surface. The resulting increase in friction and stiction further limits ultimate resolution and leads to erratic motion with time. Crossed-roller bearing stages need to be protected from dust and dirt contaminants or have their bearings, and associated parts, cleaned and relubricated from time to time.

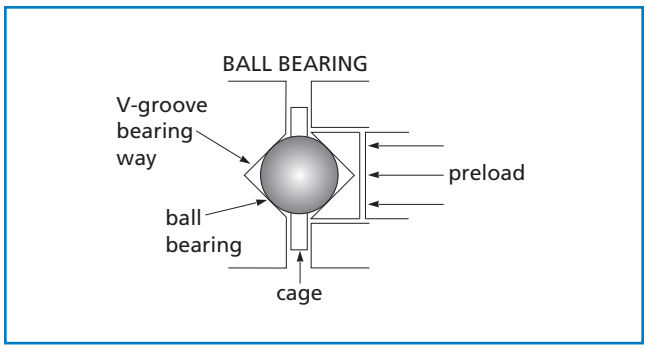

Figure 8.5 **Ball bearing**

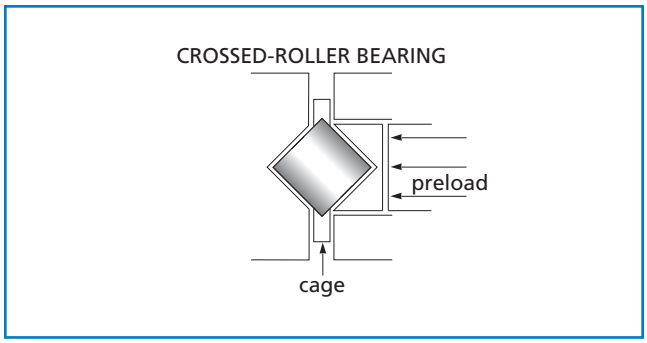

Figure 8.6 **Crossed-roller bearing**

FLEXURES

The term *flexure* embraces a number of stictionless positioning devices which rely upon the elastic deformation of solid materials. A flexure may be as small as a quartz fiber or have a thickness of several millimeters. The principle aim is to achieve low stiffness in the direction of the required motion and high stiffness in all other directions without introducing undue stress and friction.

Flexures can be used in translation stages as well as in mirror mounts. When used in translation stages, a simple flexure normally approximates straight-line movement with a circular path, so there is a second-order cross coupling between axes. This is called arcuate motion. The stage platform moves toward the base as it is displaced longitudinally (see figure 8.7).

Flexure stages offer high stiffness and resistance to shock and rely on elastic deformation of a solid material; therefore, there is essentially no friction or stiction as there is in bearing designs. Both friction and stiction in a flexure stage are so small that they are not measurable, attributable only to interatomic interactions. In addition to having no internal friction, flexures have high stiffness and relatively high load capacity and resistance to shock, coupled with low sensitivity to vibration. The limitation of these devices in any application is that the travel is typically no more than 10 to 15 percent of the major dimension of the device, or the angle of rotation is only a few degrees (less than 15 degrees). Flexures are without equal when ultimate performance is a goal and the application can accept certain constraints.

Principle of Operation of the Flexure

The flexure element constrains the stage in two axes so that the resulting motion occurs only in the desired direction. In the other axes, the flexure is rigid. The rigidity of the flexure in directions other than the axis of motion can be configured as required by strapping or stiffening the flexure to produce a rigid link with small regions of flexibility near the clamping points. If this semirigid link is sufficiently wide, then the resistance to twisting is greatly increased. Furthermore, strapped or stiffened flexures do not have the freedom to vibrate sympathetically at low frequencies since the only regions permitted to flex are typically about 0.5 mm wide and 30 mm long.

Use of a suitable return spring allows the flexure stage to be preloaded against the drive spindle. The net friction of the system is solely that remaining in the drive itself. Consequently, adding a piezoelectric actuator produces an electronically controllable stage with a resolution in the order of tens of nanometers or less.

With standard flexures, any movement in a given plane will produce a secondary displacement perpendicular to the principal plane (i.e., a moving platform tends to move toward the base of the fixed block as it is displaced longitudinally). This occurs because the flexures are fixed, and all displacements are actually associated with movement on an arc.

For many positioning applications, arcuate motion is not a problem, and the prime consideration is precision alignment and orientation in one direction. When precise movement is required in only one plane, special linearized compound flexures, which eliminate arcuate movement, are available. These consist of four continuous spring strips which are clamped at their ends and centers, as shown in figure 8.8.

Attaching the strips on both sides of the moving platform constrains the platform to linear motion. Mounting the moving platform in a saddle which also can move, and constraining its motion with similarly attached flexures, doubles the range of linear motion and increases the stiffness of the device.

Flexure technology provides the capability to design stages and component holders that are completely free from hysteresis, creep, drift, friction, and stiction. The positioning and alignment capability of a flexure device is limited only by the actuator mechanism.

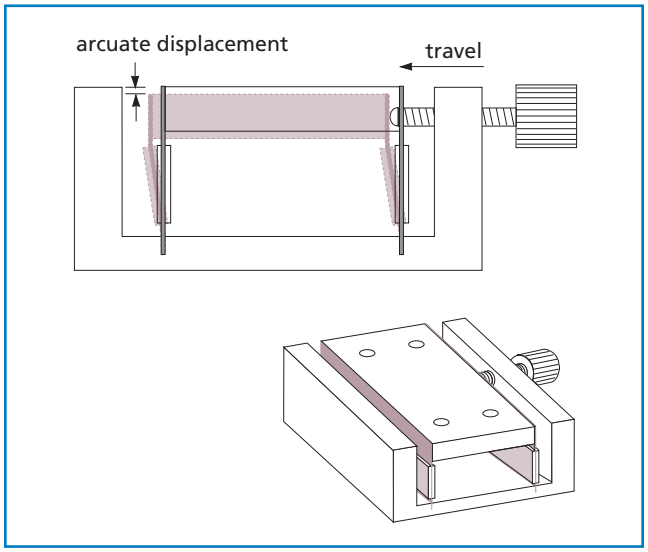

Figure 8.7 **Simple flexure arrangement showing strapping of the flexures and arcuate motion**

Figure 8.9 compares the resolution of various stage and actuator technologies. A high-resolution thumbscrew or micrometer actuator provides precision travel from many millimeters down to around 1 µm. A differential micrometer provides 50 nm of resolution over a range of 300 µm, and a piezoelectric actuator provides movement and resolution from around 100 µm down to the region of 1 nm.

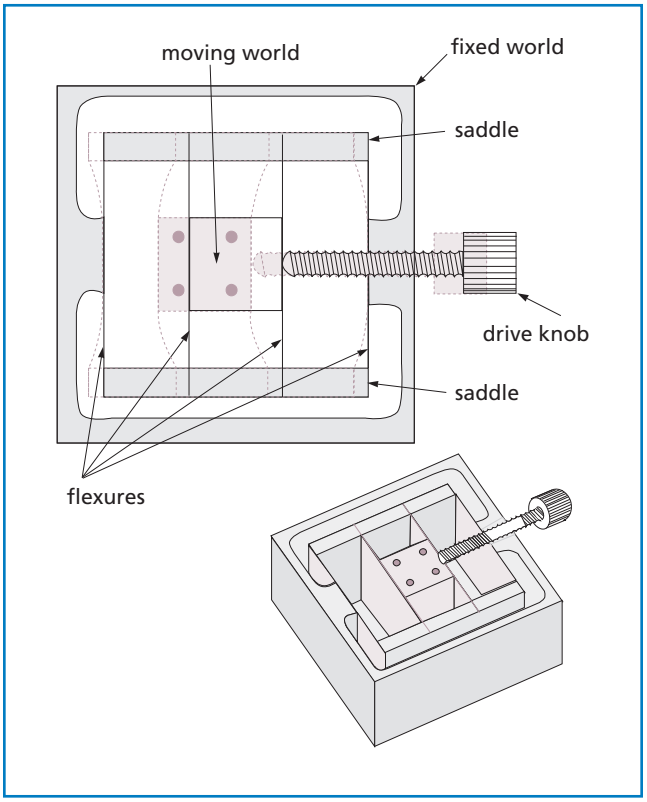

Figure 8.8 **Compound-flexure arrangement providing rectilinear translation without arcuate motion**

Single-axis compound-flexure stage

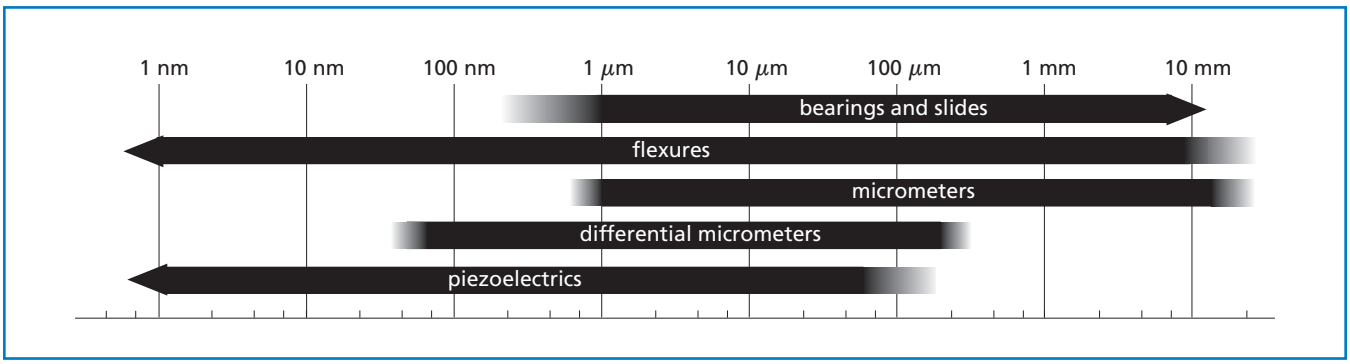

Figure 8.9 **Comparison of the resolution properties achievable by various motion and drive technologies**

Multiaxis Assemblies

Multiaxis systems are traditionally built by connecting together a series of single-axis mechanisms. As the number of axes involved increases, the designs grow in complexity and become cumbersome. Furthermore, the overall performance of the system will be inferior to that of any of its individual components because stacking drives reduces stiffness and can introduce positioning errors. Consequently, for many specialized high-precision applications, it is desirable to use integrated multiaxis systems which are designed specifically to provide high resolution and stability in all degrees of motion.

For everyday, general-purpose uses in the laboratory, one can create and build a wide variety of complex assemblies using the standard positioning building blocks offered in various opto-mechanical catalogs: the key considerations are compatibility and modularity. For example, when choosing parts from different suppliers, it is important that the parts be cross compatible. Often it is not possible to bolt and connect a stage from one manufacturer to a stage from another manufacturer. Even in the case of a sole supplier, not all the stages are necessarily compatible with each other. This can be quickly determned by comparing mounting hole patterns.

Figure 8.10 shows an example of how a number of standard positioners can be used to create a relatively complex system for addressing a specific application. Because of the modularity and compatibility of the individual positioning building blocks used in this system, the experimentalist in the laboratory can easily disassemble and then reassemble the components to create a new configuration.

For complex, multiaxis positioning, integrated parallel-flexure stages that incorporate three or more degrees of freedom into a single compact unit provide significantly improved performance over stacked stage assemblies (see figure 8.11). The starting point for the conceptual design is the observation that a rigid body naturally has six degrees of freedom. Each actuator should subtract one degree of freedom from the body, so that with six actuators the body becomes fully constrained. This contrasts with serial designs which use a stack of single-degree-of-freedom mechanisms.

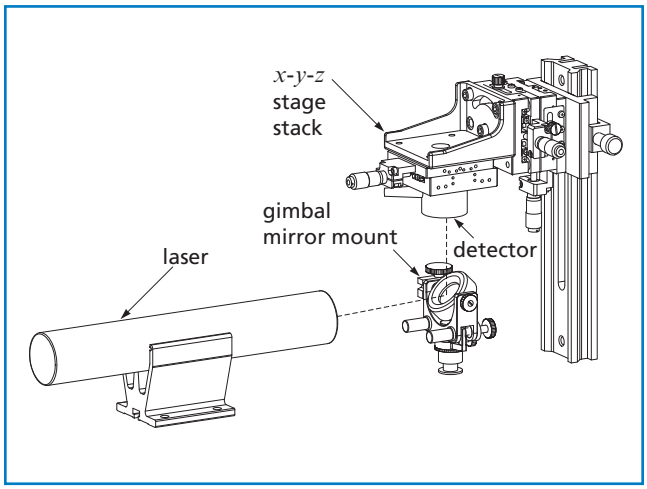

Figure 8.10 **Multiaxis stacked assembly used in a laser measurement application**

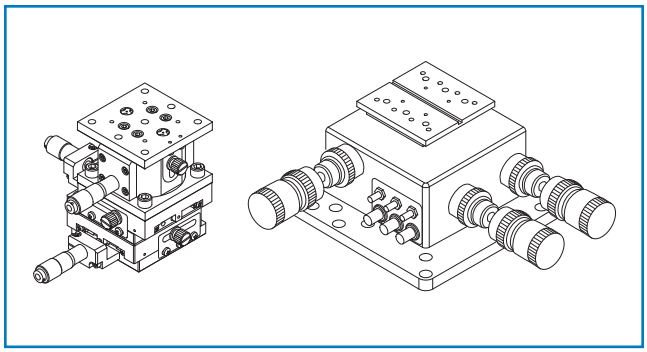

Figure 8.11 **Comparison of stacked and integrated positioning stages**

The beauty of the parallel flexure approach is its simplicity. Designers and users of nanometric positioning equipment know that, to transmit motion accurately, it is preferable to have as few moving parts acting in series as possible. Microscopic friction can occur at each interface between parts. Since such friction tends to be unpredictable and uncontrollable, it is the sworn enemy of the designer. Parallel flexure stages have very few moving parts and can transmit motion very precisely.

Parallel flexures, like serial flexures, have arcuate motion. These secondary motions do not occur in the main axis of motion. As a stage is moved to either side of its central position, transverse arcuate displacements on the order of tens of microns occur. If several axes are moved at once, the combined effect can be greater. Although these arcuate displacements are sometimes of concern, they rarely hinder aligning fibers or other optical components since optical beams rarely propagate colinearly with the axes of any stage to better than the scale of the arcuate motion. However, if arcuate motion is a defining parameter of a particular alignment or positioning application, software and a closed-loop autoalignment system can compensate for its effects.

Mechanical Drives

Mechanical drives are used to move the component on a translation stage to its desired position. Two basic types of mechanical drive are used with precision stages: manual drives and stepper-motor drives. Both types used a helical-screw mechanism to convert rotational motion into linear travel. These drives can move components over long distances, constrained only by the size of the manual drive or, in the case of stepper motors, the length of the leadscrew. The range and resolution of the various drives and stage technologies were shown previously in figure 8.9.

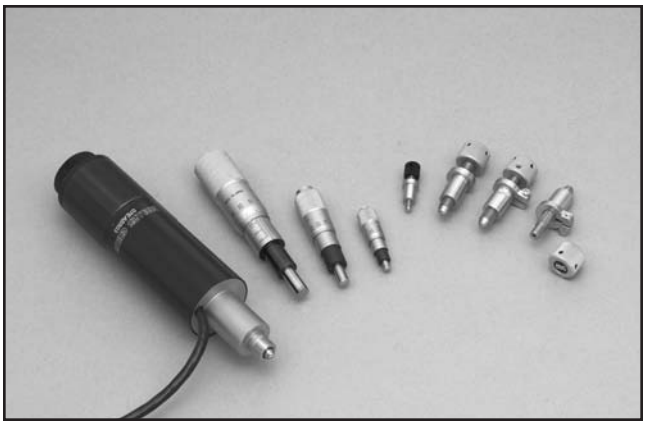

Mechanical drives with helical-screw mechanism

MICROPOSITIONING USING MANUAL DRIVES

Adjustment screws are one of the most economical methods for positioning an optical component. CVI Melles Griot uses fine-thread adjusters with pitches of 0.5, 0.3, and 0.25 mm/turn depending on the resolution required. Typically, these adjusters are made from stainless steel and are inserted into threaded brass bushings. For the most precise applications, hand-lapped threads are created by working in a stainless screw/brass thread pair.

Manual drives are the simplest, most straightforward way to control a stage. Rigidly mounted to the stage, they provide up to 50 mm of travel and have resolution as small as 50 nm. A variety of manual actuators is shown in figure 8.12.

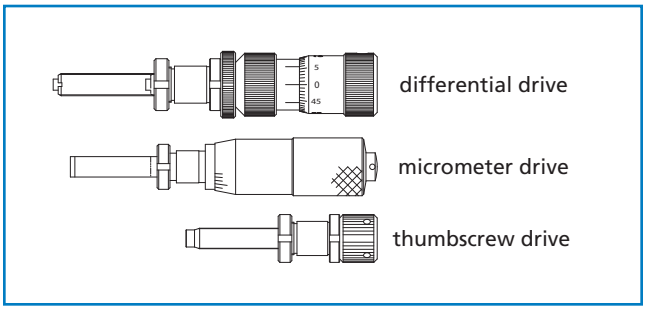

Figure 8.12 **Various types of manual drives including differential micrometers**

Thumbscrews are the least expensive of the manual positioners. They can provide resolution of a few microns, but they are not very repeatable because they do not have a mechanism for indicating the actual position.

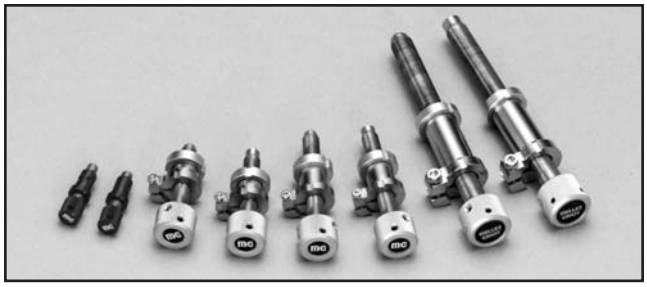

Thumbscrew drives

Standard micrometers are designed for precise, repeatable positioning. They are essentially thumbscrews with a very fine thread and are equipped with a vernier scale so that precise displacements can be made and read down to 10μm.

Differential micrometers use dual-thread movement to provide both long travel and very precise positioning with resolution as fine as 50 nm. They are more costly than thumbscrew or micrometer drives but are necessary when high-resolution, manual positioning is required. A perfect example of just such a requirement comes with single-mode fiber alignment where a focused laser beam is being aligned to a fiber core dimensioned in microns.

Micrometer drives

With direct drives, the length of the thread on a shaft determines the length of travel; the pitch of the thread, coupled with the diameter of the drive knob, determines the resolution. Differential drives use compound shafts to provide extended travel with ultrafine positioning. The outer shaft, which acts in the same manner as a direct drive, provides long travel with a resolution determined by the pitch of the thread. The intermediate shaft has an outer thread with a negative pitch and an inner thread with

a positive pitch which is slightly less than the outer pitch. The inner (push) shaft is constrained to longitudinal motion with respect to the outer shaft. When the outer shaft is turned, the other two shafts rotate with it, and the unit behaves like a thumbscrew. When the intermediate shaft is turned, the longitudinal motion is determined by the differential motion produced by the positively pitched and negatively pitched threads, resulting in resolution as low as 50 nm. Both types are available with micrometer markings.

WORM-SCREW AND LEADSCREW DRIVES

A worm-screw drive is a mechanism in which the circular motion of a screw of relatively small diameter, referred to as the worm, is used to rotate a larger gear wheel with an axis of rotation that is perpendicular to the axis of rotation of the worm screw. In this manner, it is possible to achieve a high velocity ratio between the rotation rate of the worm screw and the rotation rate of the gear wheel. Such mechanisms also make it possible to achieve higher load capacities and higher torques. A desirable characteristic of this type of mechanism is that it can be offered in a compact form and package. Many goniometer- and rotary-type stages utilize this mechanism in their designs.

A leadscrew drive is a simple and cost-effective means of using the motion of a screw inside a nut to achieve translation. As the screw rotates inside of the nut, the nut tends to move in a direction parallel to the direction of the axis of the screw. If a load is mounted on top of, or somehow attached to the nut, it will also move in the same direction along with the nut resulting in a translation motion of the load. Leadscrew drives offer the advantage of being suitable for long-travel mechanisms which also require quick motion adjustment characteristics. Because of this, leadscrews are typically used in the design of long-travel stages.

Long-travel stage with leadscrew drive

POWERED MICROPOSITIONING USING STEPPER MOTORS

Stepper motors utilize a technique called *microstepping* which achieves unrivaled performance in resolution, repeatability, range, and accuracy for the cost of the system. Although other methods might provide certain advantages in one area of performance, this technology provides the best overall performance in many high-resolution applications.

A stepper motor can be used to drive a precision leadscrew to generate a linear or rotary motion, or it can be used to directly drive a rotating stage. Stepper motors, developed from brushless dc motor technology, consist of a cylindrical rotor with many ferromagnetic teeth equally spaced around its circumference. In hybrid stepper motors, these teeth may be permanent magnets. The rotor is suspended by bearings in a cylindrical enclosure lined with several sets of electromagnets, called poles, or stators. Each electrically common set of poles is called a phase. Two- and four-phase stepper motors are the most common types.

Figure 8.13 is a simplified schematic of an idealized two-phase hybrid stepper motor. Each phase consists of four sets of poles (stators) arranged at 90 degrees, with the two opposing pairs of poles wound in opposite directions. As labeled in the diagram, the plus and minus stators become opposite magnetic poles when current flows through the phase. Note that the teeth of the eight stators are successively staggered by a quarter of the tooth pitch. When current flows through the A phase and the B current is zero, the induced magnetism of the A phase causes the rotor teeth (north poles) to align with the A stator teeth (position 0 in the figure). A single step is achieved by switching the current to the other phase where the rotor teeth are attracted to the nearest new minimum energy positions. Depending on which direction the current flows through the B phase, the step may be in a clockwise $(+1)$ or counterclockwise (-1) direction.

The total number of steps per revolution is determined by $4nt$, where nt is the number of teeth around the rotor. For example, the motor could have a rotor with 100 teeth, or 400 steps per revolution. Motor speed is controlled by varying the rate of current switching.

Stepper motors offer advantages over dc servo motors and piezoelectric devices. The stepper motor is driven by a series of current steps (see figure 8.14) which can be counted so that the final position is known well within a resolution of one step without an encoder. By using microstepping techniques, these steps can be accurately subdivided into many smaller steps of equal size, increasing resolution. Servo feedback signals are not required but can be used if desired.

Stepper motors always have at least one phase partially or fully energized so that there is no tendency of the positioner to drift or creep when stationary. Because dynamic torque is greater at low pulse rates, stepper-driven devices can accelerate relatively large loads without stalling. These devices are capable of resolution close to that of piezoactuators but have much better accuracy and vastly superior repeatability. Although sophisticated drive circuits are needed, there is no reason why a stepper system cannot be driven at speeds comparable to, or faster than, any other high-resolution device.

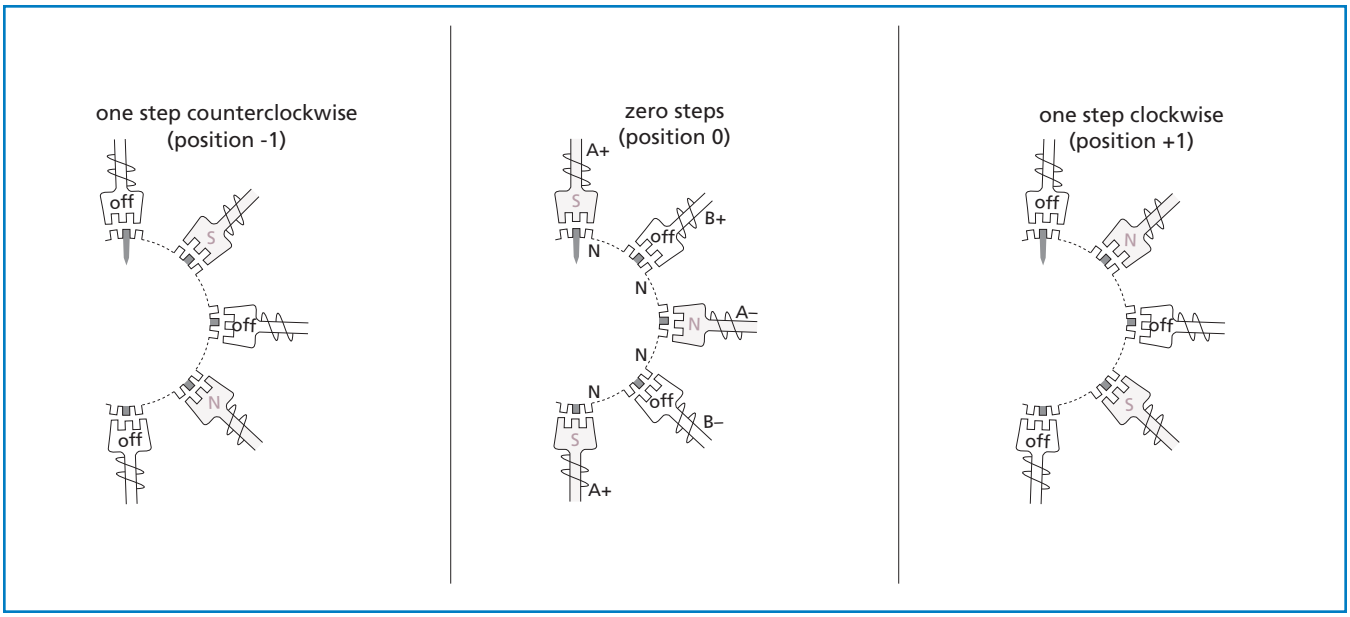

Figure 8.13 **Schematic diagram of a two-phase hybrid stepper motor showing how switching current between the phases causes the rotor to move by one step**

The principle by which the amplitude and direction of the current flowing in the electromagnetic coils within the motor change is termed commutation. A stepper motor has no internal commutation as does a brushed dc motor design. Instead, by applying current to the electromagnetic windings, stepper motors are able to move in a continuous point-to-point positioning manner. At rest, when no current is applied, there is an inherent holding or detent torque, which prevents drift.

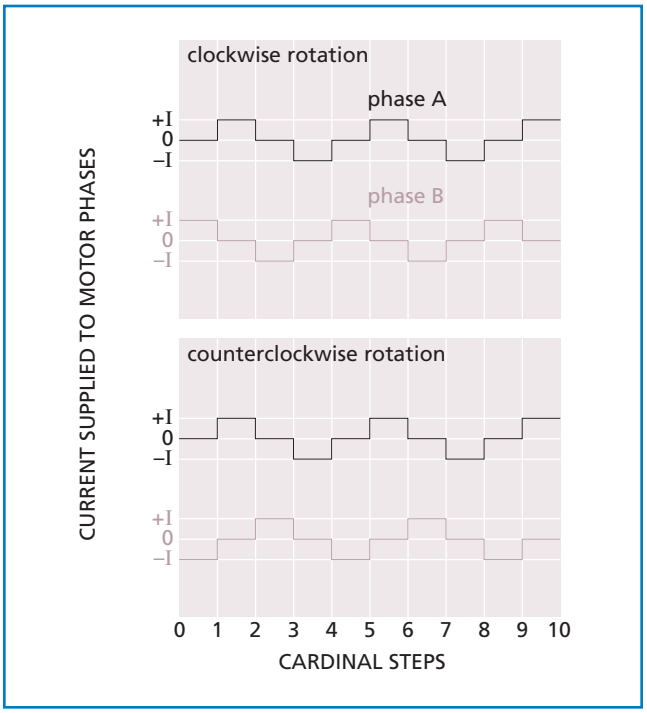

Figure 8.14 **Current-switching patterns of typical two-phase stepper motor for both directions of rotation**

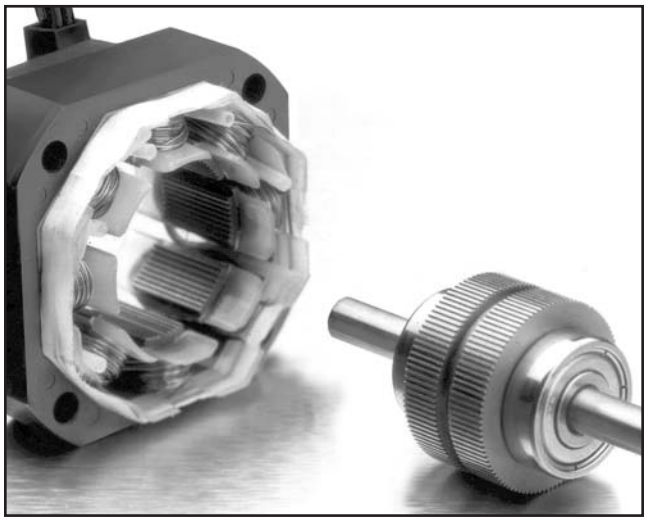

A disassembled stepper motor showing the stator and rotor

Many stepper motors have a rotor with 50 teeth. Each tooth is an individual magnet. At rest, these magnets align themselves with the stator poles in a natural detent position, providing a large detent torque if the power is removed. If the stator poles are energized in sequence, the rotor follows the changing magnetic field, and the motor rotates.

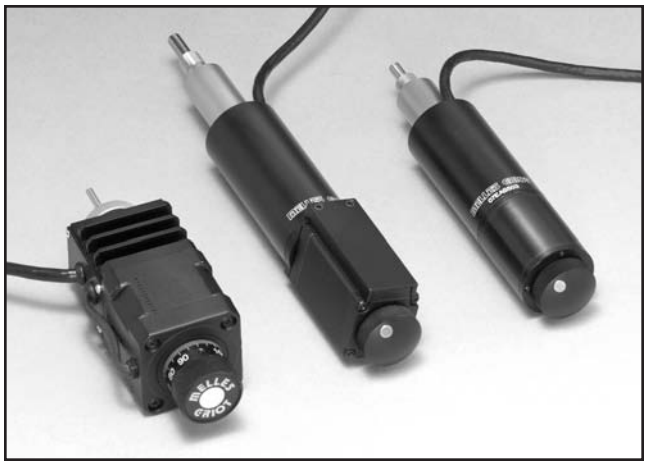

Stepper-motor drives

This type of motor (shown in figure 8.15) displays a high detent torque, as well as excellent dynamic and static torques. High stepping rates can also be achieved. The presence of two windings on each stator pole enables the poles to be either a magnetic north or south depending on the direction of current flow.

Microstepping Mechanism

Microstepping offers a significant improvement to the resolution of a conventional stepper-motor drive. Standard steppers alternate the current direction in one coil every step, resulting in a step size that could be, for example, in the order of 1.8 degrees (i.e., from detent to detent). In microstepping, the current is increased in one coil as it decreases in the other, and the new rotor position is somewhere between the two coils, and the step size is a defined fraction of a full step. This offers two main benefits: increased resolution without adversely affecting top speed and smoother low-speed motion.

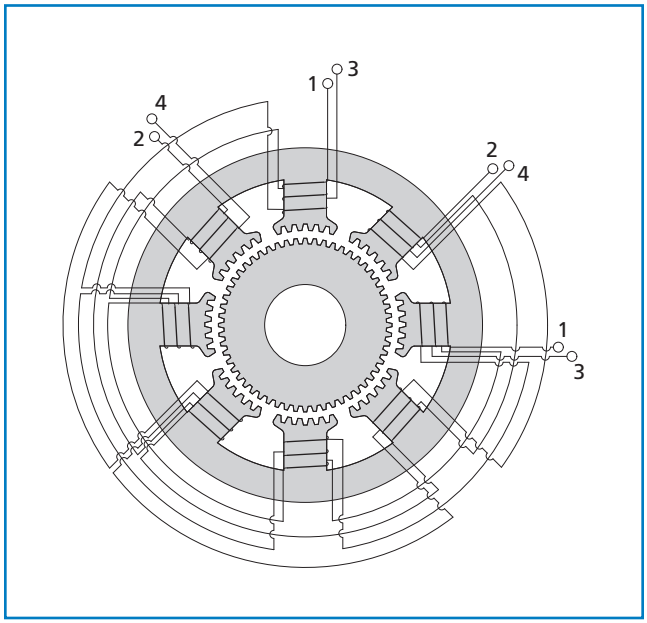

Figure 8.15 **Schematic diagram of stepper motor showing the pole connections**

Increased resolution is achieved in the following fashion, which is presented here only as a general example to explain how the mechanism operates. For a standard full step motor with a leadscrew thread pitch of 1.0-mm , a shaft rotation speed of 30 revolutions per second generates a velocity of 30 mm per second and gives a resolution of 5 μm. A divide by 10 microstepper supplies the same 5-micron resolution with a 10-mm leadscrew but with a velocity of 300 mm per second. Alternatively, the resolution can be increased to 1.0 micron with a 2-mm leadscrew or 0.5 micron with a 1-mm leadscrew.

Smoother low-speed motion is another advantage of microstepping. Stepper motors move in discrete angular steps and inherently produce noise and vibration if operated at low step rates. Microstepping reduces the step size and increases the frequency for a given rotation rate, thereby producing smoother operation at low speed.

Piezoelectric Drives

Flexure technology provides the capability to design stages and component holders that are completely free from any hysteresis, creep, drift, friction, and stiction. The positioning and alignment capability of a device using well-designed flexures is limited only by the drive mechanism. A high-resolution thumbscrew or micrometer will provide precision travel from many millimeters down to about 1 μm. A state-of-the-art differential micrometer will provide a 50-nm resolution over a range of 300 μm, and a modern piezoelectric (PZT) drive will provide movement and resolution from about 200 μm down to the region of 1 nm using position feedback piezoelectric control.

PIEZOELECTRIC EFFECT

Piezoelectricity, or pressure electricity, a property of some crystalline materials, was discovered by Pierre and Jacques Curie in the 1880s. When these materials are compressed, they produce a voltage proportional to the applied pressure. This effect became known as the piezoelectric effect. Conversely, when an electric field is applied across the material, there is a change of shape. In fact, the change is proportional to the applied electric field, and it is this latter change in shape that is useful when producing the small dimensional changes required for precision positioning. The piezoelectric effect is extremely small in naturally occurring minerals, but present-day materials technology has produced a range of ceramics which can deliver linear extensions of up to 1 percent. Several natural materials exhibit piezoelectric properties, but most devices now use polycrystalline ceramics, such as lead zirconate titanate, and are generally known as PZT ceramics.

Typically, linear extensions of up to 200 µm are obtained when suitable voltages are applied to the appropriate ceramic geometries. Several families of ceramics and types of devices were developed when designers attempted to accentuate the more desirable properties and minimize the less appropriate ones for specific applications. Although similar materials are used, it is proper to refer to the devices that operate in the ferroelectric region below the Curie temperature as piezoelectric and to those that operate in the paraelectric region above the Curie temperature as electrostrictive.

Piezoelectric ceramics must be poled for them to exhibit piezoelectric properties. Above the Curie temperature, the electric dipoles are randomly arranged. If a strong electric field is applied when ceramic is cooled below the Curie temperature, the dipoles remain partially aligned and respond collectively to subsequent smaller field changes producing significant dimensional changes. Traditional piezoelectric materials are categorized as soft or hard. Both must be poled. Hard piezoelectrics have Curie temperatures above 300°C with limited dimensional changes; soft piezoelectrics have lower Curie temperatures and greater dimensional changes but depole more easily. However, soft piezoelectrics can be repoled quickly and easily. Traditionally, high voltages (up to 2000 Vdc) have been applied to stacks of thin slices of piezoelectric materials to produce the required extensions. Figure 8.16 illustrates the typical length increase when voltage is applied to such stacks. Note that the increase in length is approximately linear with the applied field and that there is some saturation at higher voltages. Also there is pronounced hysteresis, which is greater with the soft piezoelectric material.

Piezoelectric drives

Although high voltages are used, power consumption is low, and almost no energy is consumed in maintaining a fixed position with a fixed load. Piezoceramics can respond rapidly to changing input voltages (microsecond time constants), and the positional resolution is limited only by the noise of the power supply. The need for voltages in the 1 to 2 kV range has restricted their utilization because of the cost, electronic noise, reliability, and safety issues involved.

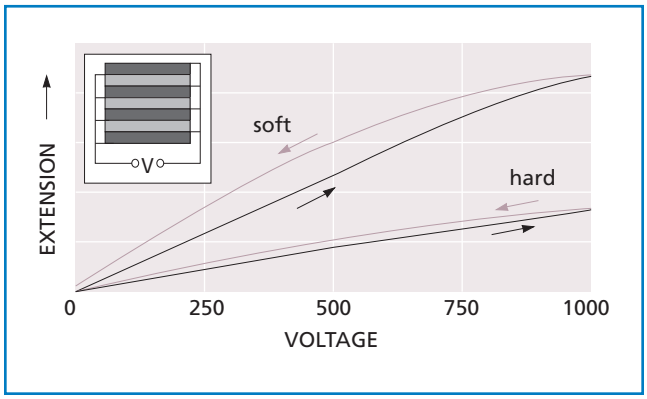

Figure 8.16 **Comparison of soft and hard piezoelectric ceramics** The curves show typical hysteresis behavior as the voltage applied to piezoelectric stacks is increased and decreased. The inset diagram shows how the voltage is applied to a stack made from seven slices of piezoelectric ceramic.

PIEZOELECTRIC DRIVES

Usually quite high voltages are required to produce a useful amount of expansion. In order to avoid excessive drive voltages, piezoelectric materials have been developed that can be used at low voltages. The piezoelectric drives themselves are generally constructed from thin ceramic elements, interleafed with electrodes, as shown in figure 8.17. In this way, the distance from positive to negative electrodes is very small, which means that a useful expansion can be obtained with only a modest drive voltage (75 V is typical in the case of CVI Melles Griot actuators).

Drives made from such piezoelectric ceramics are ideal for producing small, friction-free motions appropriate to the adjustment of optical components.

Actuators made from piezoelectric materials, called piezoactuators, have the following advantages over other actuators:

- Although the expansion is very small it can be controlled in an extremely fine fashion by varying the strength of the applied electric field, or voltage. In fact, the resolution is limited only by the inherent noise and stability of the electronic driver providing the voltage.
- The motion produced is smooth and continuous because the expansion is a process at the atomic level, and therefore there is no friction or stiction.
- The force generated by an expanding piezo can be very large, up to several hundreds of Newtons.
- Piezoactuators respond very quickly to the applied voltage and can therefore produce oscillating motion at high input frequencies.
- The power dissipation of a piezoactuator is very small, especially when static (typically milliwatts when moving and microwatts when static).

Open-loop piezoelectric drives, however, also have their disadvantages:

- They are nonlinear and suffer from hysteresis and drift.
- High-strain materials have a low Curie temperature (i.e., the temperature at which polarization is lost).
- They do not perform efficiently when pulling.
- They require a continuous voltage source to maintain their position.

HYSTERESIS EFFECT

If the voltage applied to a piezoelectric device is increased from zero, the expansion vs voltage curve follows path 1 as shown in figure 8.18. If the voltage is decreased, path 2 is followed. Path 3 is followed when the voltage is increased again. If the voltage is cycled between two fixed levels, the extension follows the closed loop defined by paths 2 and 3.

Hysteresis is defined as the maximum difference between the upward and downward paths expressed as a percentage of the full range.

If hysteresis is likely to be a problem in a particular application, the final position can always be approached from one direction. This unidirectional approach, together with computer routines, can be used to linearize the motion and correct for any fine hysteresis, creep, and temperature changes. Such software linearization can be very effective for routine operation of a well-characterized system.

A more powerful and generally applicable technique is to use piezoelectric actuators with closed-loop feedback control of their extension. Hysteresis and creep are then of no importance. CVI Melles Griot has developed a

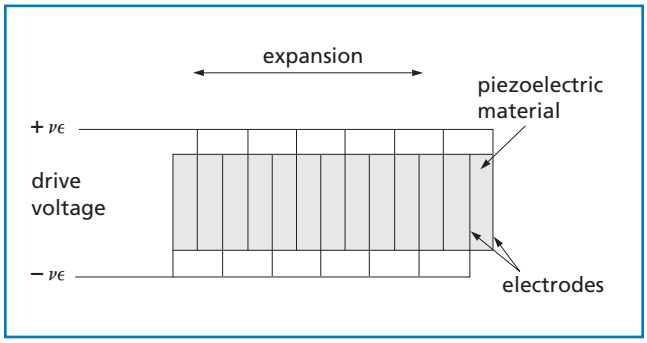

Figure 8.17 **Schematic representation of a low-voltage piezoelectric stack**

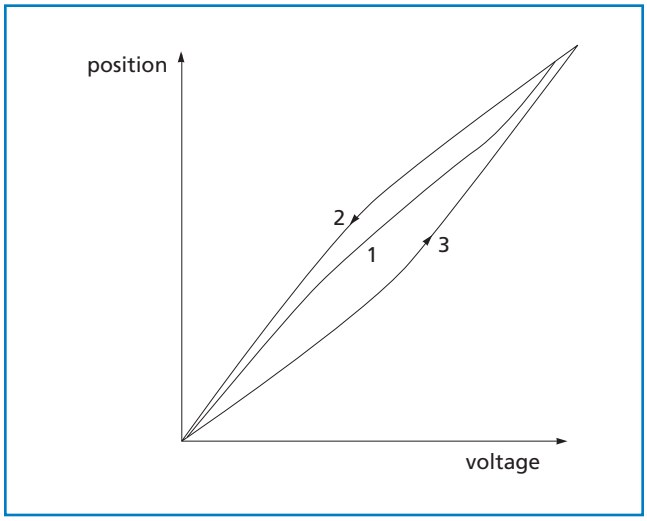

Figure 8.18 **Simplified schematic representation of hysteresis loop**

range of piezoelectric actuators fitted with closed-loop position feedback sensors. These are designed to produce linear movement with the highest possible resolution and stability, as shown in figure 8.19. When used with the appropriate controllers, the linearity of response is better than ± 0.5 percent, and the noise equivalent motion is ±5 nm.

Clearly, piezoceramics (piezoelectrics or electrostrictives) are not perfect voltage-to-displacement transducers, but they are friction and stiction free, with motions ranging from hundreds of microns down to less than 1 nm. With modern low-voltage and preloaded designs, operation is simple and reliable. In many optical and fiber-optical applications, the positioning and alignment requirements, although requiring submicron control, can readily be met by standard low-voltage preloaded piezoelectrics when operated with low-drift and low-noise controllers.

LOW-VOLTAGE PIEZOELECTRIC AND ELECTROSTRICTIVE DEVICES

Piezoceramic stacks rated for operation at much lower voltages (0 to 150 Vdc) are available. CVI Melles Griot offers very reliable, long-life actuators for operation at even lower voltages, in the range of from 0 to 75 Vdc, with good response even below 10 Vdc. These actuators have been optimized for operation in optical and fiber-optical applications. This extremely low-voltage piezoelectric technology has been chosen by CVI Melles Griot because it is more appropriate than any other currently available.

A possible alternate technology is to use piezoelectric materials in the electrostrictive mode. A major electrostrictive material is lead magnesium niobate, a centrosymmetric material, which can be operated in a multilayer stack structure using from 0 to 150 Vdc. The hysteresis of low-voltage soft piezoelectrics is typically between 10 and 15 percent, but it remains essentially constant from −60°C to +60°C, whereas the electrostrictive hysteresis is less but changes with temperature, from 3 percent at 30°C to 10 percent at 5°C. These figures, which are for full-cycle motions, are the ratio of the maximum difference of the displacement position on the voltage increasing path to that on the voltage decreasing path, compared to the displacement at maximum voltage (see figures 8.20 and 8.21). Notice that the hysteresis cycle for the piezoelectric is much smaller when small local movement corrections are required. Instant smooth positive and negative adjustments are available with high resolution and no backlash (note: hysteresis does not equate with backlash).

Hysteresis curves for piezoelectric materials are truncated near the origin (zero applied voltage). A low-voltage piezoelectric stack can be easily preloaded so that the motion shows fewer effects of saturation, the hysteresis is reduced, and the truncation disappears, leaving a well-defined zero datum.

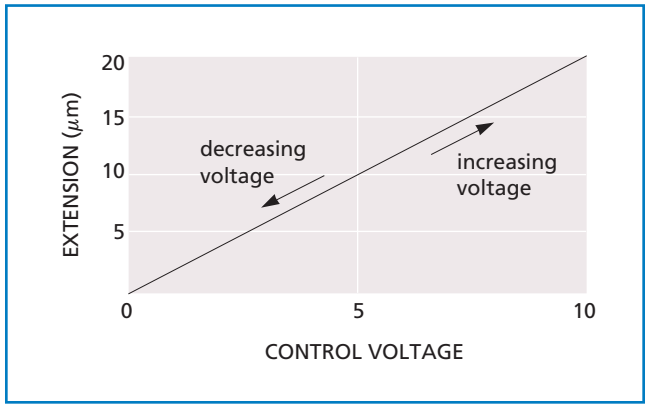

Figure 8.19 **Piezoelectric with position feedback control**

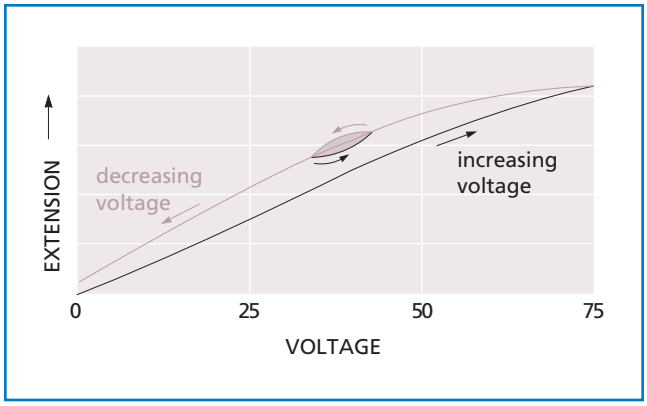

Figure 8.20 **Typical piezoelectric hysteresis curves** The size of the hysteresis loop depends on the size of the voltage excursions and can be small for small voltage reversals. Compare the small hysteresis loop for the approximately 7.5-Vdc cycle with the larger loop for the full 75-Vdc cycle.

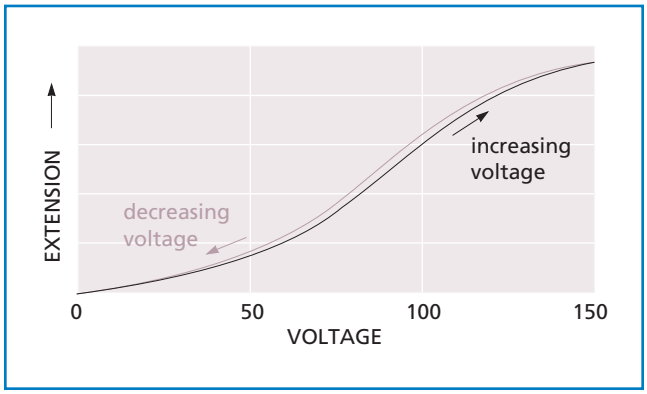

Figure 8.21 **Typical electrostrictive hysteresis curve** The hysteresis is low, but the response is nonlinear and there is very little sensitivity at low voltages.

The general shape of the hysteresis curve for an electrostrictive stack is very different from that for a piezoelectric stack because the expansion of piezoelectric devices (to first order) is linear in the applied field, whereas the electrostrictive devices expand according to the square of the field (to first order). This has several consequences. For example, in the case of electrostrictive devices, a logarithmic rather than linear voltage amplifier is required; consequently, any precision linearization system will be more difficult to implement and will require greater dynamic response. Also, at low voltages, because the expansion is almost zero for electrostrictive materials, it is difficult to make systems operate in the range of from 0 to 15 Vdc.

For fiber-alignment applications, as for most optical-alignment and orientation applications, neither the higher hysteresis of piezoelectrics nor the higher nonlinearity of electrostrictives is important. What is most important is the stability of the alignment once it is obtained. This, of course, is a combination of the quality of construction of the alignment mechanism and the stability of the ceramic stack. The two biggest problem areas associated with piezoceramics involve changes with temperature and positional creep or drift.

The length of low-voltage piezoelectrics varies slowly with changes in temperature. The exact value of the effective linear expansion coefficient will depend on both the piezoelectric material and the housing. Typically, devices can be used from −20°C to +80°C, the upper temperature being restricted to avoid depolarization of the soft ceramic. Electrostrictive ceramics are carefully designed to have a maximum electric-field-dependent movement over a limited temperature range. Typically, the response changes up to 50 percent for a 25°C temperature change.

After the operating voltage of a piezoelectric or electrostrictive device is changed, there will be a further drift in the same direction, following the immediate movement. This creep or drift may total several percentage points, but its magnitude decreases exponentially with time and usually is negligible after a few seconds. The creep in low-voltage piezoelectrics and electrostrictives is almost identical, and both exhibit much better creep performance than the traditional high-voltage devices.

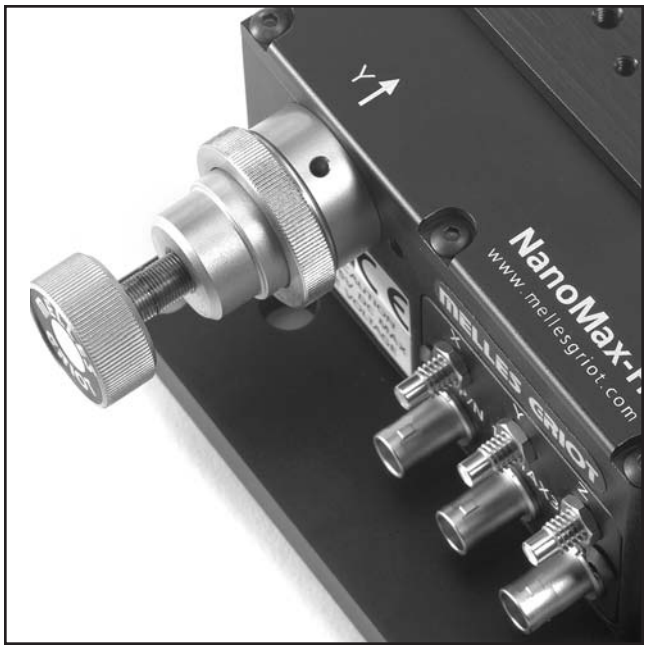

Flexure stage with built-in piezoactuators

Piezoactuator electronic controller

Nanometric Positioning Technology

In an optics laboratory, the need to align optical components with nanometric precision, as well as to maintain this alignment once it is achieved, is increasingly crucial. For example, since a typical single fiber has a core diameter of from 2 to 10 μm, a precision of <0.1 μm (100 nm) may be required when aligning such a fiber with another fiber or optical system.

Traditionally, resolutions of 0.1 μm can be achieved with differential micrometers and, in many applications, this resolution is perfectly adequate, particularly if the system design employs mechanical gain or leverage.

However, it is not sufficient just to have high-resolution adjusters. They must be coupled with optical holders or stages to facilitate the desired linear or angular motion of the optical component such as an optical fiber. Three linear (transitional) and three angular (rotational) motions must be achievable in order to fully describe the motion and position of a solid body in free space (see figure 8.22), and these six degrees of freedom are the basis for describing the alignment of an optical component.

FIBER ALIGNMENT

Greater performance and functionality are being asked of fiber-positioning systems. For example, a fiber-to-waveguide alignment workstation may use up to 12 axes of motion, each requiring nanometric resolution. The workstation should be quick to set up, easy to use, and ergonomic. Once set up it should work reliably even under harsh, prolonged, and continuous use.

As the commercial demand grows for fiber-pigtailed optoelectronic components, so does the production requirement for automated, semi-automated, and operator-assisted fiber-optic alignment operations. With the cost-effectiveness of implementing these operations an increasingly important factor, it is clear that there is a demand for a new class of tools for fiber-optic alignment.

Component designers typically use two main positioning technologies: Crossed-roller bearings and flexures. Crossed-roller bearings offer long travel and high load capacity. For example, some of the motorized stages use crossed-roller bearings to give travel up to 150 mm and load capacity up to 50 kg. The positioning resolution of bearing stages relies heavily on the accuracy of the component parts. Flexures derive high resolution from their basic geometry and the elastic properties of solid materials. Because they are extremely reliable and repeatedly achieve very fine resolution, CVI Melles Griot selected flexures as a preferred technology for fiber alignment.

In the past, multiaxis systems were built by connecting together a series of single-axis mechanisms (whether bearing or flexure). When the number of axes involved is large, the designs grow in complexity and become cumbersome. This initiated the creation of multiaxis, parallel flexure designs which exhibit a remarkable combination of performance and functionality.

FLEXURE DESIGNS FOR MULTIAXIS SYSTEMS

Stability and simplicity make the parallel flexure design ideal for fiber alignment and other types of nanometric positioning. Because a rigid body naturally has six degrees of freedom, each actuator in the parallel flexure design should subtract one degree of freedom from the body, so that, with six actuators, the body becomes fully constrained. This contrasts with serial designs which, as shown in figure 8.23, use a stack of single-degree-of-freedom mechanisms.

The positioning errors of each element in a stacked system are additive, ultimately degrading the performance of the final multiaxis system. To transmit motion accurately, it is preferable to have as few moving parts acting in series as possible. Parallel flexure stages, by effectively combining positioning mechanisms, can transmit motion very precisely.

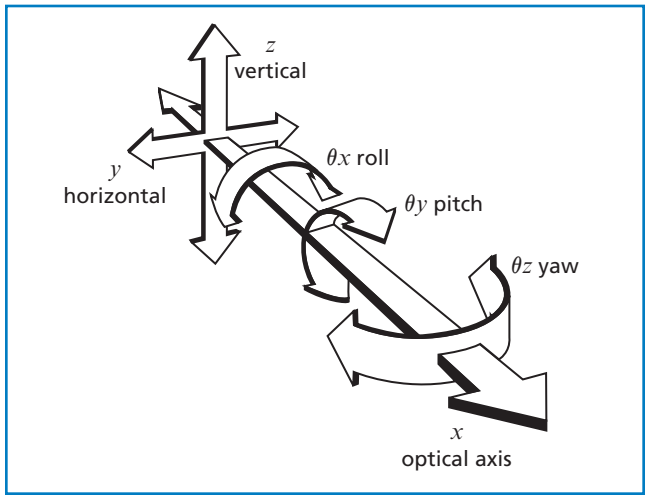

Figure 8.22 **Degrees of freedom or motion using the Cartesian frame of reference**

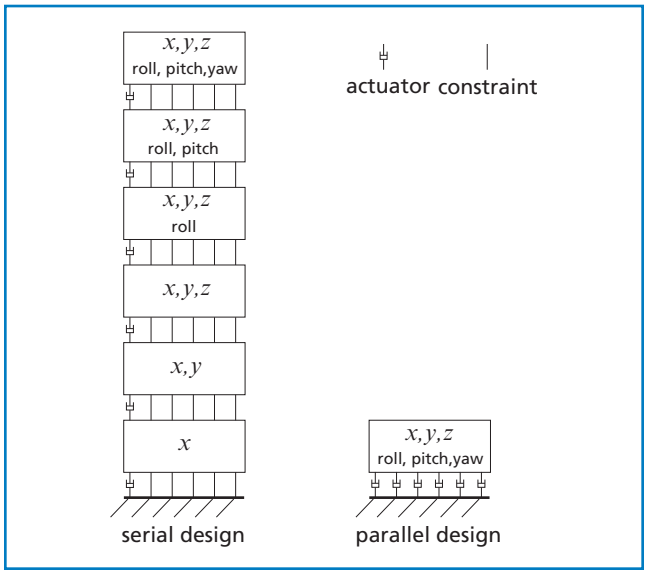

Figure 8.23 **Comparison of six-axis serial and parallel stage designs**

The graph in figure 8.24 shows the bidirectional repeatability of a six-axis flexure stage. The scan was made over 30 mm in 1-mm steps. Root-mean-square repeatability was 15 nm, or 0.05 percent of full range.

It is worth remembering that parallel flexures, like serial flexures, have arcuate motion. These secondary motions do not occur in the main axis of motion. As a stage is moved either side of its central position, transverse arcuate displacements of the order of tens of microns occur. If several axes are moved at once, the combined effect can be greater.

Although these arcuate displacements are sometimes of concern, they rarely hinder aligning fibers or other optical components since optical beams rarely propagate colinearly with the axes of any stage to better than the scale of the arcuate motion.

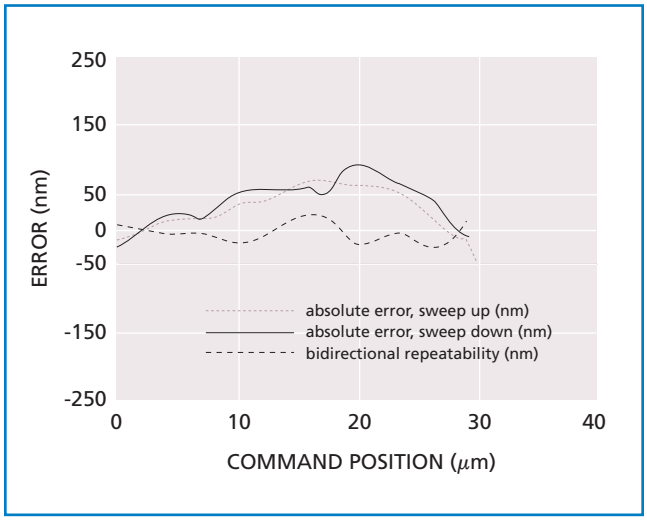

Figure 8.24 **Bidirectional accuracy and repeatability of six-axis parallel flexure stage**

STABILITY

Ambient vibrations and temperature changes are forces that can easily interfere with a fiber-alignment procedure; therefore, nanometric positioning stages should be designed to be as resistant as possible in the face of such detrimental disturbances.

If a mechanical system has many linkages in series, the stiffness of the whole system is less than the stiffness of each individual linkage. In a parallel flexure design, on the other hand, the stiffness of the linkages is additive. This makes parallel flexure designs very stiff, and there is little movement in response to any external disturbing force.

Due to the low friction among the small number of moving parts, small disturbances are of an elastic nature. When a transient load or shock is applied to the stage, it will quickly resettle into its original position, as shown in the figure 8.25.

To be immune to vibrations, the resonant frequency of a stage should be as high as possible above the range of ambient vibrations. The resonant frequency f can be estimated by using the formula

$$f = \frac{1}{2\pi}\sqrt{\frac{k}{m}} \qquad (8.1)$$

where k is the stiffness of the stage and m is the mass of moving parts. It is therefore desirable that the stiffness be high and the mass of moving parts be low. Parallel flexure design stages optimize both of these parameters. These advantages of the parallel flexure design increase with the number of axes of motion.

We mentioned earlier that friction in the parallel flexure system is extremely low. A possible side effect is a prolonged ringing of the stage at its resonant frequency whenever a shock is applied. This is very effectively controlled, however, by a secondary damper fixed to certain moving parts. The damper quickly absorbs the energy of these vibrations without having any effect on the accuracy of the stage.

Thermal drift occurs when differential expansions occur among materials in a mechanical system. To minimize thermal drift of the parallel flexure stages, athermal design techniques may be used. Where possible, similar materials are used; otherwise, materials are chosen that compensate for differential expansions. Other elements in an alignment system, such as the mounting table surface and fixturing accessories, contribute to thermal drift. The system must be viewed as a whole to assess total thermal drift.

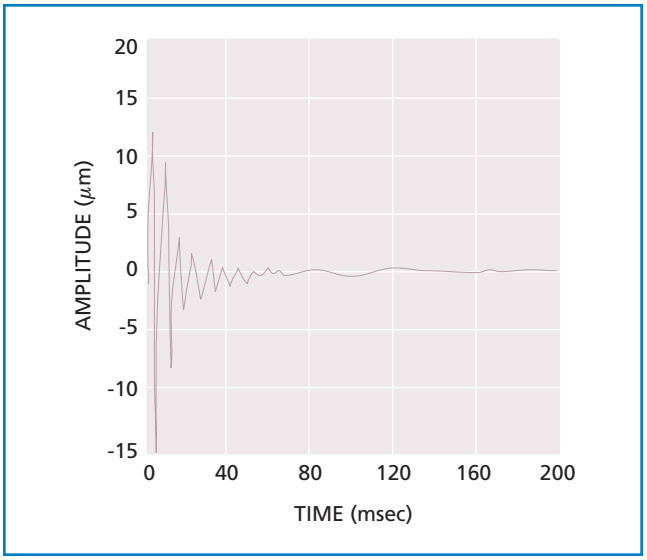

Figure 8.25 **Response to a transient load**

EASE OF USE

Those involved in the day-to-day manufacture of fiber-optic devices understand the complexities involved. Skill and training are required to achieve very fine alignments repeatedly. A key feature of parallel flexure designs is that the actuators, whether manual or motorized, always remain stationary. They are literally bolted onto the outside of a solid case.

When adjusting a micrometer, torque and sideways force will always be applied. The exact amount of these forces depends on the skill of the user. In a serial design, whether bearing or flexure, this force is transmitted through the moving parts of the stage and will disturb its position. In a parallel design, however, very little disturbance occurs even if the micrometers are handled less cautiously. It is therefore easier to achieve a given resolution, making parallel flexure devices ideal for production environments.

The simplicity of the parallel flexure design has been applied to a new class of nanometric positioning stages offered by CVI Melles Griot. These three-axis and six-axis products offer all the benefits of parallel flexure design, including accuracy, resolution, stiffness, immunity to vibration, dynamic response, ease of use, functionality, modularity, and upgradability.

METHODS OF FIBER LAUNCH AND COUPLING

The vast majority of fiber launch and coupling applications can be incorporated into five general categories: fiber to fiber, fiber to lens, fiber to waveguide to fiber, fiber to multiwaveguide, and fiber to multiwaveguide to fiber.

Fiber-to-Fiber Coupling

After initially launching light into a fiber, researchers in optoelectronics laboratories often obtain a temporary link between fibers by butt-coupling them. Single-mode fiber-to-fiber coupling is extremely sensitive to lateral misalignment of the fiber cores and to the end separation. For example, a lateral offset of one third of the fiber core diameter or an end separation of five times the core radius results in a 1-dB loss in transmission.

For efficient coupling, the two single-mode fibers must be aligned to within a few microns. As a starting point for the alignment, the tip of the fibers are placed at a separation of approximately 1 mm and as near to the optical axis as possible. It is often necessary to use a sensitive power meter for this process. Typically the experimentalist uses a set of transverse horizontal (y) and vertical (z) micrometer drives to alternately scan the tip of the fiber on the moving platform in two axes in order to couple light into the fiber on the fixed platform. At some point in this scan, the power meter will detect a slight increase in power. When this occurs, the user adjusts y and z to maximize the power. Finally, the fibers are brought together using the x micrometer until it is only just possible to see the separation between the fibers. While doing this, one must make fine lateral (y and z) adjustments to maintain maximum power throughput. This is done in a step-wise fashion, so that, with each x movement, both y and z are optimized again.

When butt-coupling polarization-maintaining fibers, it is necessary to rotate the fibers to match the birefringent axes, in addition to aligning the fibers laterally.

The above process can be significantly enhanced with the addition of an automated optical alignment system. One such device, an automatic alignment controller from CVI Melles Griot, can automatically perform the fiber-to-fiber alignment process in less than one second. It can dramatically simplify characterization and pigtailing procedures and can ensure drift-free positioning and accurate data acquisition. The automatic alignment controller performs three functions: searching, aligning, and maintaining optical coupling. More is said about this technology in the following sections.

Fiber-to-Lens Coupling

Sometimes it is necessary to couple light from a focused (lensed) laser source into a single-mode optical fiber. Aligning a fiber to a lens requires the accurate manipulation of the fiber in a minimum of three axes (x, y, z). Depending on the manufacturing and fixturing tolerances of the components, adjustment in roll (θx), pitch (θy), and yaw (θz) may also be needed (see figure 8.26). Typically the laboratory setup that is used for this purpose is equipped with precision stages with stepper-motor drives on all axes and piezoelectric actuators on the y and z axes.

Fiber-to-Waveguide Coupling

Many optical devices have the form of a rectangular waveguide. For example, laser diodes are in the form of a rectangular waveguide, and the light beam that they emit is propagated from the edge of the waveguide in a highly divergent fashion. In fiber-optic applications, particularly those related to telecommunications, it is often necessary to couple the light from these waveguides into the optical fiber (see figure 8.27). This requires a high degree of precision, comparable and often higher than, the degree of precision required in fiber-to-fiber applications. However, the alignment processes and techniques described in the above section associated with the fiber-to-fiber alignment application, to a great extent, applies in the case of the fiber-to-waveguide alignment process as well.

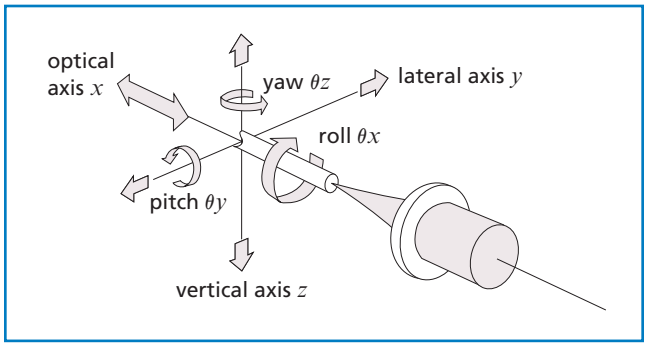

Figure 8.26 **Fiber-to-lens alignment process**

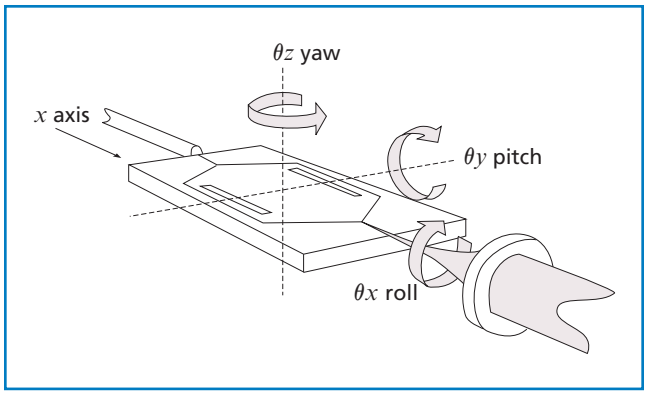

Figure 8.27 **Fiber-to-waveguide alignment process**

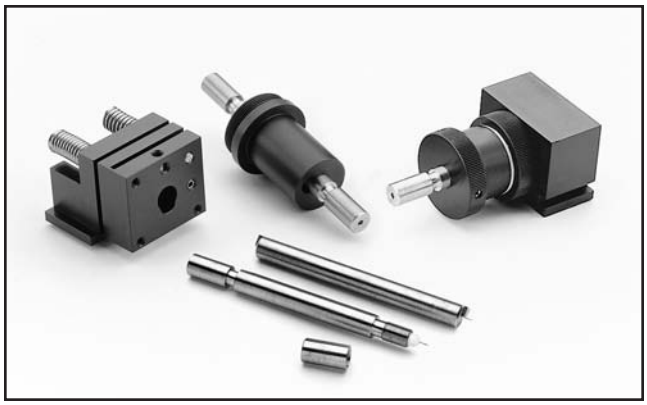

Various fiber-optic holders

Fiber Launch with Microscope Objective

It is common to launch a collimated beam of light into an optical fiber using a microscope objective as the focusing element (see figure 8.28). The collimated light, typically from a diode laser source, is collected and focused by the microscope objective directly into the fiber. For optimal coupling efficiency, the numerical aperture of the optical fiber must be compatible with that of the microscope objective. Aligning this system is very similar to aligning a simple fiber-launch application. However, lateral misalignments are less critical than in direct fiber-to-fiber coupling, but angular misalignments are more so. To compensate for the angular sensitivity, the standard microscope objective holders can be replaced with adjustable mounts equipped with specially threaded mounting adaptors that can provide ± 3 degrees of angular tilt in θy and θz (yaw and pitch) and provide a sensitivity (or resolution) of 10 arc seconds.

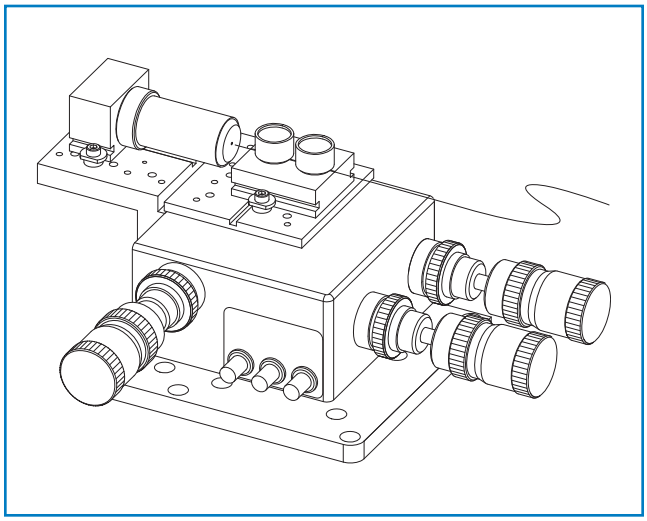

Figure 8.28 **Three-axis fiber-launch system using microscope objective**

Automated Alignment

A typical fiber-optic alignment application, fiber-to-fiber alignment, is shown in figure 8.29.

Usually one of the fibers is fixed in place, and the other fiber is mounted on a piezoactuated stage which moves the fiber in the horizontal and vertical axes. The goal is to have the fibers aligned so that laser light, propagating through the first fiber, is coupled efficiently into the second fiber and the transmission through the second fiber is maximized. Once the two fibers are clamped into their respective fixtures, the process should be automatic, without operator intervention.

A typical automated alignment setup is shown in figure 8.30. As an optical source, such as a laser, is coupled into the first fiber, an optical detector monitors laser throughput at the end of the second fiber. The power information is fed into an auto-alignment system which tells the piezoelectric controllers to drive the stage containing the first fiber into alignment.

There are two main steps to the complete process: first, a prealignment process locates the fibers close enough that some laser light propagates through the complete system, and then an autoalignment process maximizes the throughput, bringing the fibers into optimum alignment.

PREALIGNNMENT PROCESS

For the automated alignment system to work, a signal, however weak, must first be propagating through the complete system. Typically, fixturing is not sufficient to accomplish this task by itself, particularly with single-mode fibers. One way to prealign the system is to have the alignment system go through a blind raster scan of sufficient height and width that, at some point, a signal will be obtained. This technique works well for relatively simple, single-component alignment situations like that described above. For multiple-component situations (e.g., fiber array to waveguide to fiber array), the process can be quite time consuming and inefficient in a high-volume production application.

For high-volume applications, a prealignment process based on machine vision technology is the preferred option. Machine vision systems can identify all the components, determine their location, and provide relocation signals to the alignment system that are sufficiently precise to get a signal through the system. This is accomplished in a fraction of the time involved in the blind-raster approach.

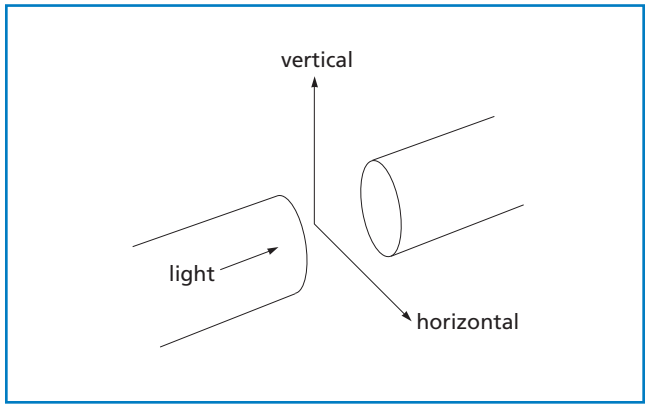

Figure 8.29 **Fiber-to-fiber alignment application**

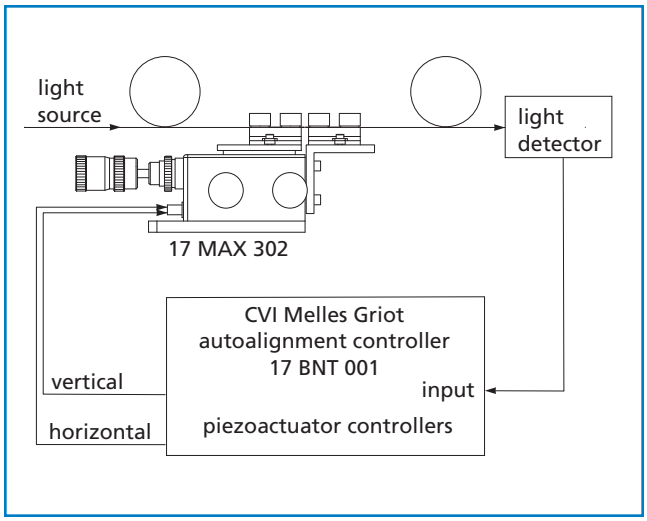

Figure 8.30 **Schematic of the automated alignment system**

AUTOMATED ALIGNMENT USING AN AUTOMATIC ALIGNMENT CONTROLLER

The CVI Melles Griot automatic alignment controller provides automated alignment among many types of optical components through scanning and tracking. For example, the automatic alignment controller can search for power over a given area coupled into a single-mode fiber from a laser diode, and then maximize the throughput.

Machine vision used in prealignment process

Beam acquisition and optimal alignment occur in less than a second. The speed is ultimately limited by the dynamic response of the flexure stage under piezoactuation. Parallel flexure stages have excellent dynamic response because of their low inertia and high stiffness; therefore, that tracking is extremely stable and can be performed even more rapidly than with serial stages.

CVI Melles Griot uses the automated alignment system to optimize component location and maximize throughput. The automatic alignment controller automatically aligns fibers to devices, dramatically simplifies waveguide characterization and pigtailing procedures, and ensures drift-free positioning and accurate data acquisition.

The automatic alignment controller modulates the coupled optical power between two components by applying a small circular oscillatory motion to one of the components in the y-z plane. The motion is achieved by imposing a small modulation voltage to the y and z piezoelectric actuators of the positioning device holding the component. The radiation transmitted to the next optical component and on through the optical system is constantly monitored for power, modulation intensity, and phase; normally a simple detector is adequate. Using phase-sensitive detection techniques, the automatic alignment controller provides output dc correction voltages which are amplified in the piezoelectric controller and applied to the device piezoelectric drives to drive the component into alignment.

Figure 8.31 illustrates a typical automatic alignment application with the CVI Melles Griot autoalignment system. Details of the controls and functions used in this process are described in the following paragraphs.

Track and Latch Mode Operations

There are two basic alignment modes: the track mode and the latch mode. In the track mode, once a signal is detected through the system, the automatic alignment controller drives the components into optimum alignment and then continues to actively monitor the alignment and make any corrections necessary to maintain optimum throughput. A low-pass filter within the control loop limits the minimum response frequency to 4 Hz, allowing tracking to be maintained in all normal circumstances. In this way, any sudden disturbances will not be tracked, and the last position of maximum coupling will be maintained. In the latch mode, once the system is optimized, active adjustment is discontinued, and the last recorded position is held until the power is removed or the unit is switched back to track mode.

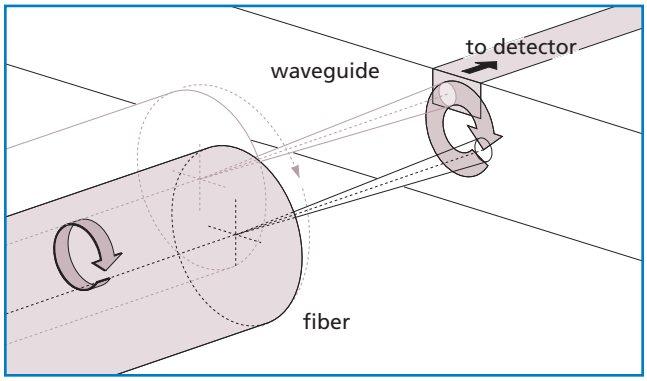

Figure 8.31 **Conical scan used in fiber-to-waveguide alignment**

The track mode is used for most applications, but there are occasions when the latch mode is appropriate. For example, when bonding fibers some users have found that the UV curing process can generate an erratic throughput signal, which, in the track mode, could cause the components to move out of alignment.

Scanning Circle Control

Two modes are used to control the diameter of the scanning circler: automatic and manual.

In the automatic mode, the scanning circle diameter is initially 15 percent of the maximum piezoactuator extension (MPE), approximately 3 μm for the standard 20-μm MPE piezoactuators. As the intensity of light coupled through the system increases, the diameter of the scanning circle decreases, inversely proportional to the transmitted power, to a minimum of 0.25 percent MPE (50 nm with 20-μm piezoactuators). This minimum has been chosen so that a good tracking signal is always maintained. In the manual mode, the user sets the scanning circle diameter, using software controls in the graphical user interface.

Scan Circle Position

The software display gives a real-time representation of the alignment of the two fibers or optical components. The position of the circle on the screen represents the degree of extension of the two piezoactuators. The bottom left corner of the screen represents zero extension for both vertical and horizontal piezoactuators; the upper right corner of the screen represents full extension of both the vertical and horizontal piezoactuators. The actual alignment position may fall anywhere on the screen. However, it is most desirable that this position be near the center (50 percent MPE) to provide the greatest range of extension available to compensate for relative positional changes of the components. Without interfering with the automatic tracking, the user can adjust the mechanical drives on the positioning stage to center the alignment position.

Programmable Scanning

The built-in conical scanning algorithms meet a wide range of needs, especially when using single-mode fibers. However, in other situations (e.g., longer-extension piezoactuators, multimode fibers, integrated optical devices), it may be desirable to have more influence on the scanning operation or to use custom scanning routines. This can be accomplished through the USB interface with software included with the automatic alignment controller.

With software control, the scan circle diameter can be adjusted to match any piezoactuator MPE or fiber diameter. A simple command sets the circle diameter at any stage of the alignment process. Three separate diameters are usually sufficient: (a) a large circle to acquire the signal, (b) an intermediate circle to optimize the alignment, and (c) a small circle that is large enough to maintain optimization but small enough that it will not interfere with device characterization.

Computer control also can be used to develop custom scan and search routines. For example, the symmetrical square spiral shown in figure 8.32 is one basic search pattern. This pattern increases the capture range of the scanning circle by deflecting it over the full field of the piezoactuators, providing a larger area for the coupling surfaces to overlap.

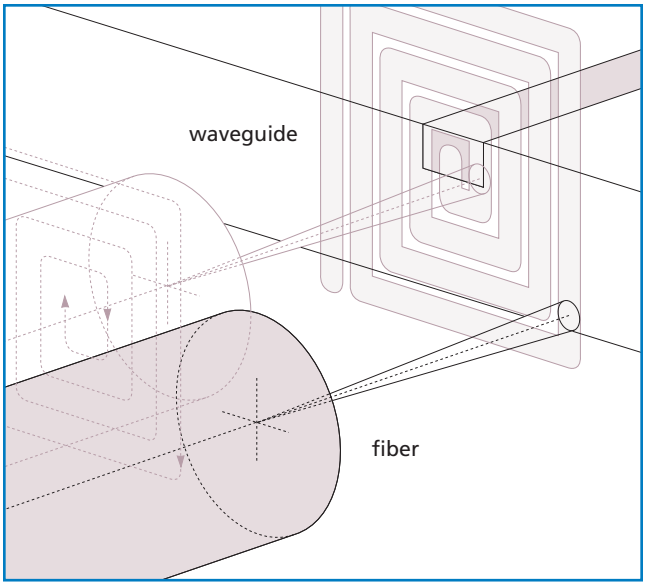

Figure 8.32 **Symmetrical square spiral scan**

HOW THE AUTOMATIC ALIGNMENT CONTROLLER MAXIMIZES OPTICAL POWER

Optical power transmission through the fiber can be plotted as a function of any two axial positions of the moving fiber and shown as a series of concentric circles. These concentric circles represent the power contours and can be thought of as the contours on a map. The automatic alignment controller must guide the fiber to the summit. By detecting the gradient of power at a given position, it can adjust that position until the power is maximized and the gradient becomes zero. The automatic alignment controller calculates the gradient by moving the fiber in a small circle and scanning the change in power over the motion (see figure 8.33).

Consider the vertical component of the fiber motion. Plotted over time, this will produce a sine wave. However, at t_0, although the vertical motion is a maximum, the power only reaches a maximum at t_1. Similarly, the minimum motion is at t_2, whereas the minimum power is not reached until t_3 (see figure 8.34).

By detecting the phase of the optical power signal, (see figure 8.35) the automatic alignment controller directs the fiber to the maximum point. Once it has found the maximum, it locks onto it. Even if one of the fibers is moved slightly, the automatic alignment controller directs the piezoactuators to correct for the movement to maintain the maximum power.

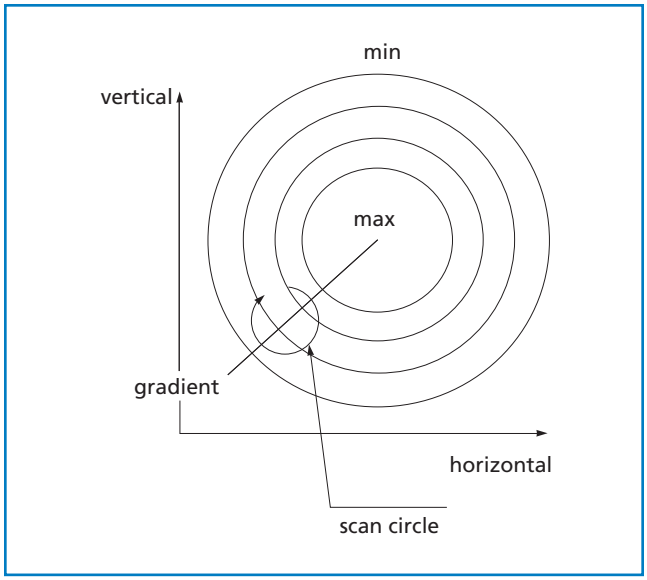

Figure 8.33 **Scanning the power gradient**

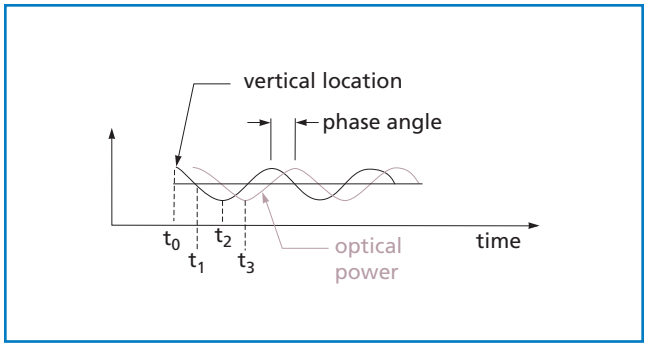

Figure 8.34 **Optical power as a function of vertical position**

The process time for an autoalignment system depends upon the number and complexity of operations to be performed. As a benchmark, CVI Melles Griot has provided systems for aligning and pigtailing input and output fiber bundles to a four-channel waveguide. Using the machine vision prealignment process and autoalignment, the cycle time for the complete operation is less than 2 minutes per completed component.

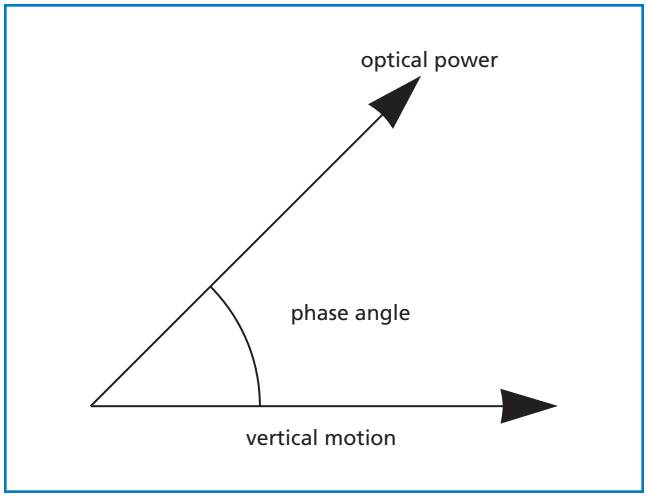

Figure 8.35 **Phase angle between optical power and vertical motion**

Drive Options

CVI Melles Griot offers a comprehensive selection of thumbscrew, differential micrometer, stepper-motor, and piezoelectric drives for manual or automated positioning. Thumbscrew drives provide high-resolution movement at an economical price. Differential micrometers offer both long travel and high-resolution adjustment in one actuator. Stepper-motor drives provide high-speed actuation with excellent repeatability. Piezoelectric drives are used for applications where automated, ultrahigh-resolution movement is required.

Thumbscrew drives

Stepper-motor drives

Differential micrometer drives

Piezoelectric drives