Product Data Sheet

Systec® Stand Alone Prep Scale

Vacuum Degassing System

The Systec Stand Alone Prep Scale vacuum degassing system for HPLC is a high efficiency in line module that removes dissolved gasses from HPLC mobile phases. Built for the rigors of modern preparative and semi-prep scale HPLC, its unique design assures reliable continuous operation and the highest level of continuous performance available. Two solvent lines may be degassed simultaneously by one unit.

- Ultra-high degassing efficiency
- Low volume, easy to prime
- Patented control eliminates baseline fuctuations
- Dual lumen design for low-flow resistance
- Inert flow path
- 5+ year lifetime

ZHCR® Control with Built-in Test Diagnostics

- Microcontroller self-test vacuum sensor validation on power-up
- Continuous vacuum system monitoring to ensure optimum operational conditions are maintained
- Vacuum system fault detection and shutdown function indicators

Systec AF / ZHCR Degassing Technology

The prep / semi-prep scale degassing chambers are designed to be easy to prime, and are configured with a Systec AF degassing membrane to provide maximum degassing capacity with the absolute minimum internal volume (<3% of PTFE designs with comparable degassing capacity).

The ZHCR (Zero Hysteresis / Constant Run) vacuum pump employs a patented closed-loop, micro-stepping RPM control strategy permitting the pump to run with continuously variable speed, providing quick pull-down at high RPM, and then sustaining a consistent vacuum level at low RPM.

Fluctuations in detector baseline due to changes in vacuum level are eliminated by not having to repeatedly stop and start a single-speed pump. This also greatly reduces wear and noise.

The brushless motor enables quiet operation and is appropriate for environments where solvent vapors may be present.

Overall Dimensions

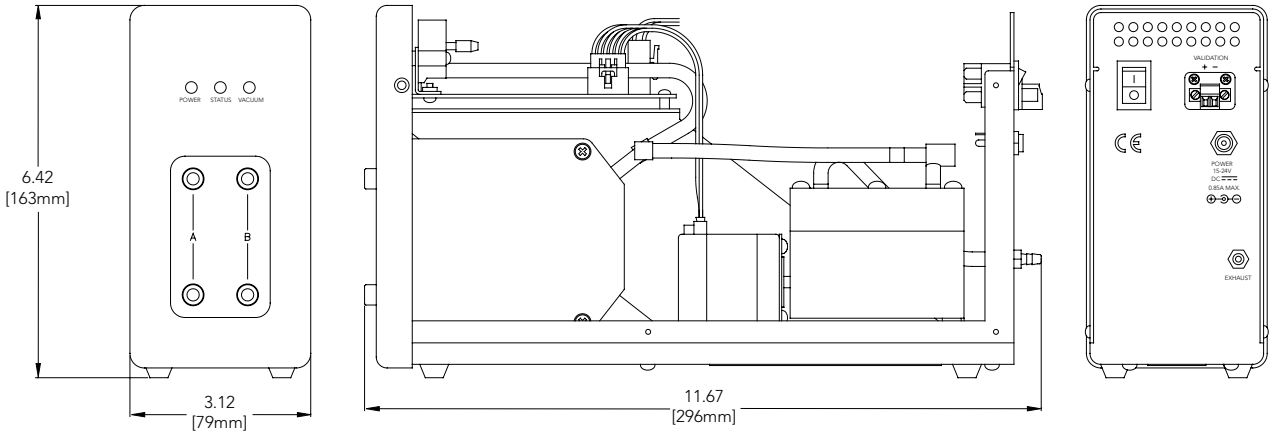

Available Configurations[A, B]

Systec Model Number	Number of Channels	Volume Per Channel (mL)	Max HPLC Gradient Flow Capability[C] (mL/min)	Pressure Drop[D] (kPa/mL/min)
0001-6482	2	8.4	20	0.04
0001-6484	2	13.8	40	0.06

A. Custom configurations are available. Consult us for your own OEM solution to your specific application.
B. The standard prep scale chambers are not recommended for GPC applications or for use with HFIP (hexafluoroisopropanol).
C. The flow rates given are for a gradient mixture of 60/40 MeOH/H_2O, with a typical low pressure gradient mixing valve. Higher flow rates are possible with high pressure mixing.
D. Estimated tubing pressure per unit change in flow assuming laminar flow with a viscosity of 1.0 cP.

Validation Output

A 2-pin rear panel receptacle labeled "Validation" with mating screw-lock plug is provided to allow a validation signal from the control circuit to be sent to a computer or data system. This validation output indicates vacuum level.

Signal:

- 5mV DC / 0.13kPa (1 mmHg) absolute from 2.7 to 106.7 kPa (20 to 800 mmHg) (0.100V DC at 2.7 kPa (20 mmHg); 4.000V DC at 106.7 kPa (800 mmHg)

Accuracy:

- ±1.0% of reading ±0.010V DC from 2.7 to 106.7 kPa (20 to 800 mmHg)

Power Requirement

Input Power required with AC Adapter (included):

- 100 to 240V AC (±10%), 1A, 50 to 60 Hz (±3 Hz)

Four interchangeable wall sockets are supplied with the AC Adapter: North America/Japan, U.K., Continental Europe, Australia.

CE Certification

This product has been certified under the following CE testing standards: EN61326-1; EN55011; EN61300-3-2; EN61300-3-3 & EN61010-1.

Systec® and ZHCR® are registered trademarks of IDEX Health & Science LLC.
Systec AF™ is a trademark of IDEX Health & Science LLC.
U.S. Patents 5,340,384; 6,248,157 & 6,494,938.
©2009 IDEX Health & Science LLC

SY6:500-03/2009

IDEX HEALTH & SCIENCE

IDEX Health & Science LLC
www.idex-hs.com
North/South America +1 866 339 4653 | Europe +49 1801 808 800 | Asia +86 10 6566 9090