Product Data Sheet

Systec® OEM MINI

Degassing Module

The Systec OEM MINI Degassing Module is a state-of-the-art degassing module that is compact and ready for integration into virtually any existing LC pump, degassing tray, or stand-alone degassing application. This module is available with a CE-approved wall transformer and adapters for international power.

- Ultra-high degassing efficiency
- Low volume, easy to prime
- Patented control eliminates baseline fluctuations
- Single lumen design for consistent degassing
- Inert flow path
- 5+ year lifetime

ZHCR® Control with Built-in Test Diagnostics

- Microcontroller self-test vacuum sensor validation on power-up
- Continuous vacuum system monitoring to ensure optimum operational conditions are maintained
- Vacuum system fault detection and shutdown function indicators

Systec AF™ / ZHCR Degassing Technology

Flow-through vacuum degassing chamber with a single amorphous perfluorinated copolymer (Systec AF) degassing membrane, enabling degassing efficiency 50 times that of PTFE, while maintaining the superb chemical inertness of fluorinated materials.

The ZHCR (Zero Hysteresis / Constant Run) vacuum pump employs a patented closed-loop, micro-stepping RPM control strategy permitting the pump to run with continuously variable speed, providing quick pull-down at high RPM, and then sustain a consistent vacuum level at low RPM.

Fluctuations in detector baseline due to changes in vacuum level are eliminated by not having to repeatedly stop and start a single-speed pump. This also greatly reduces wear and noise.

The brushless motor enables quiet operation and is appropriate for environments where solvent vapors may be present.

Overall Dimensions

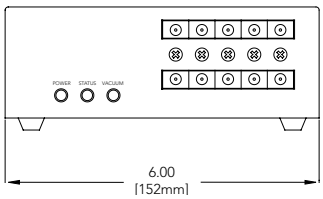

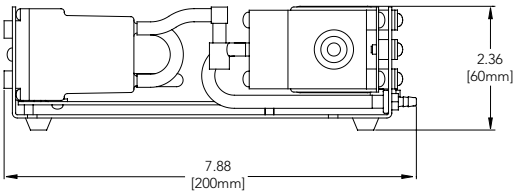

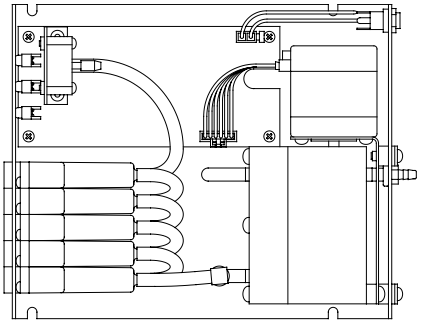

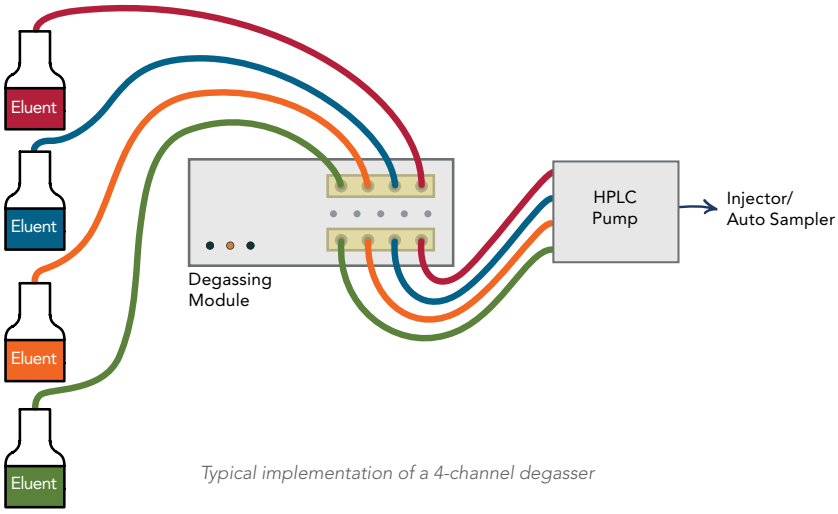

Typical implementation of a 4-channel degasser

Available Configurations[A, B]

Systec Part Number	Number of Channels	Channel Volume (µL)	Max HPLC Gradient Flow Capability[C] (mL/min)	Pressure Drop[D] (kPa/mL/min)	Degassing Flow Path ID (mm/in)
0001-6271	2	195	0.8	0.08	1.143/0.045
0001-6274	2	480	2.0	0.18	1.143/0.045
0001-6254	4	480	2.0	0.18	1.143/0.045
0001-6234	5	480	2.0	0.18	1.143/0.045

A. Custom configurations are available. Consult us for your own OEM solution to your specific application.
B. The standard MINI degassing chamber is not recommended for GPC applications (room temperature or heated), nor for use with HFIP (hexafluoroisopropanol). We offer a special GPC "hardened" version. Please consult the factory for details.
C. The flow rates given are for a gradient mixture of 50/50 MeOH/H_2O, with a typical low pressure gradient mixing valve. Higher flow rates are possible with high pressure mixing.
D. Estimated tubing pressure per unit change in flow assuming laminar flow with a viscosity of 1.0 cP.

Systec® and ZHCR® are registered trademarks of IDEX Health and Science LLC.
Systec AF™ is a trademark of IDEX Health and Science LLC.
U.S. Patents 5,340,384; 6,248,157 & 6,494,938.
©2009 IDEX Health & Science LLC

SY3:500-03/2009

IDEX HEALTH & SCIENCE

IDEX Health & Science LLC
www.idex-hs.com
North/South America +1 866 339 4653 | Europe +49 1801 808 800 | Asia +86 10 6566 9090