Product Data Sheet

Systec®
High-Flow Degasser

Improves Dispense Precision

IDEX Health & Science's Systec® High-Flow Degasser is designed to degas liquids in high-throughput applications, such as clinical chemistry analyzers, to prevent bubble formation and improve dispense precision.

Key Features and Benefits

- Removes dissolved gases and bubbles from fluidic lines to improve dispense precision
- Longest lifetime pump and membrane materials are selected to reduce maintenance, which in turn, reduces total cost of ownership
- Compatible with a broad range of aqueous fluids including aqueous salts, organics, detergents, and sterilizing agents (pH range: 2–13)
- Highest efficiency membrane reduces unit size, which increases available benchtop space
- Tested and calibrated assembly is ready for installation

Technical Data

Part Number	**0001-6706**
Operational Flow Rate (mL/min)	0–1,000
Pressure Drop (at 20 °C and max flow)	< 15 kPa
Internal Volume	< 45 mL
Degassing Efficiency (removed O_2% in DI water at max flow)	> 50 %
Number of Channels	1
Operating Pressure Range	-12 psig to 0 psig*
Maximum Temperature	40 °C
Wetted Materials	Polysulfone, silicone rubber, polypropylene, Tygon™ S-50-HL, medical grade adhesives
External Fluidic Ports	3/16 inch (4.8 mm) ID barb fittings
Expected Lifetime**	> 6 years *(continuous run at 100 rpm 12 hours/day 365 days/year)*

*Rating indicates the unit should be used on the inlet side of a pump. Other configurations available for higher pressures.
**Please contact factory for additional pump/lifetime options.

Systec High-Flow Degasser

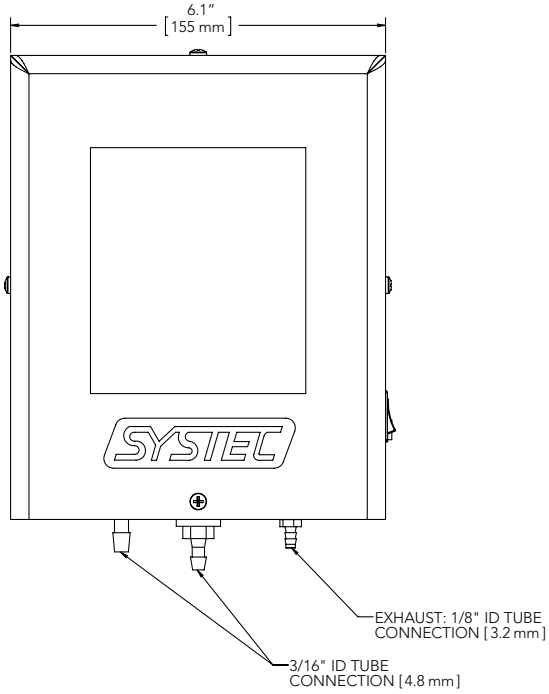

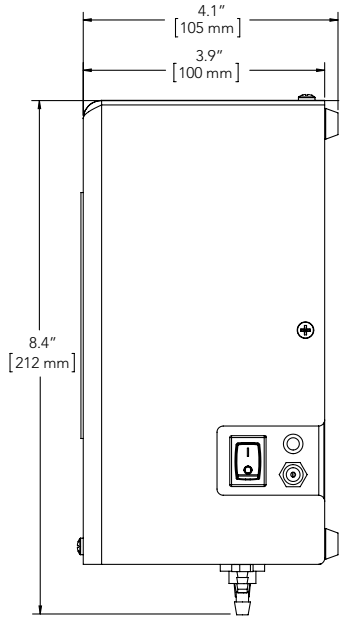

Pump Control Specifications		
Power Requirements	24 V DC at 0.85 amp max. (0.5 amp typical)	
International Power Adapter Included	**Input:** 100–240 V DC~, 50-60 Hz, 0.6 A **Output:** 24 V DC 0.75 A	
LED Indicators Single Bi-Color	**Green — Blinking**	Vacuum reaches upper control range
	Green — Solid	Vacuum reaches control set point
	Amber — Blinking	Power on, vacuum operating normally
	Amber — Solid	Error condition, shutdown
Errors Detected	Programmed to ensure optimal operation of 3 key components	

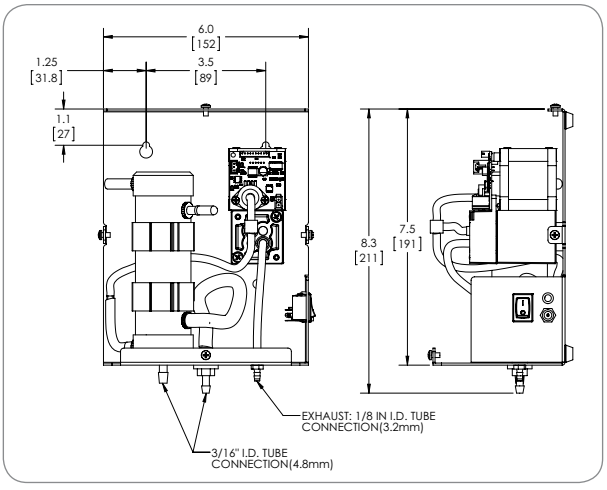

Internal structure

Systec® is a registered trademark of IDEX Health & Science LLC
©2012 IDEX Health & Science LLC

IDX1462-PS-SY/2.2012