Product Data Sheet

Rheodyne® TitanHT™

Ultra-High Pressure Fluidic Valves

To address the next generation of Ultra-High Performance Liquid Chromatography (UHPLC) systems, the versatile TitanHT series of fluidic valves for OEM instruments is now capable of 25,000 psi (1,724 bar / 172 MPa).

High Pressure, Low Maintenance

Patent Pending MetalLife™ technology enables very high-pressure injection, selection, and switching with ultra-high seal life for maximum instrument uptime. With two times the seal life* of the equivalent 15,000 psi (1,034 bar / 103 MPa) valves, the newest addition to the TitanHT series provides cutting-edge valve technology for next generation instrumentation.

Principle of Operation

The Rheodyne TitanHT uses shear valve technology; the fluid inlet (stator) remains stationary as a grooved seal on the rotor surface rotates to change port connections. These valves are available in multiple positions and port configurations, and with different materials for compatibility.

Rapid Replacement Pod™ Design for Easy Maintenance

The Rapid Replacement Pod design of the TitanHT liquid-end lends itself to two easy methods of field maintenance. The Pod can be purchased separately and replaced as a unit, allowing virtually no instrument downtime for repair, or genuine Rheodyne RheBuild® Kits are available for replacement of the seal components.

Advanced Composites = Long Life Actuator

Highly inert and wear-resistant, the advanced composite polymers used extensively in the TitanHT valve actuator allow these valves to be actuated maintenance-free** for the life of the valve.

Available Driver Board

The specially designed PCB for motor drive and valve control integrates easily into your new instrument. OEM customers only need to provide the digital control signals and 24V DC power in order to achieve random access actuation and position feedback. All valves may be controlled by BCD, I2C, UART, Pulse or Dual Pulse standards; two-position valves may also be controlled with level logic. In the case where multiple devices need to be controlled, I2C communication allows up to 128 devices to be connected to a single instrument. The default configuration is level logic for the two-position and BCD for the multi-position valves.

Eliminating customer development of board and firmware means shorter product development cycles and reduced time-to-market.

*Tested under laboratory conditions with filtered 50% MEOH. Comparison made between 15,000 psi valve run at constant 15,000 psi pressure and 25,000 psi valve run at constant 25,000 psi. System configuration and switching pressure can have a dramatic effect on valve seal life at UHPLC pressures.

**Within established ranges.

TitanHT™

2-Position, 6-Port TitanHT shown.
Dimensions given in inches and [millimeters]

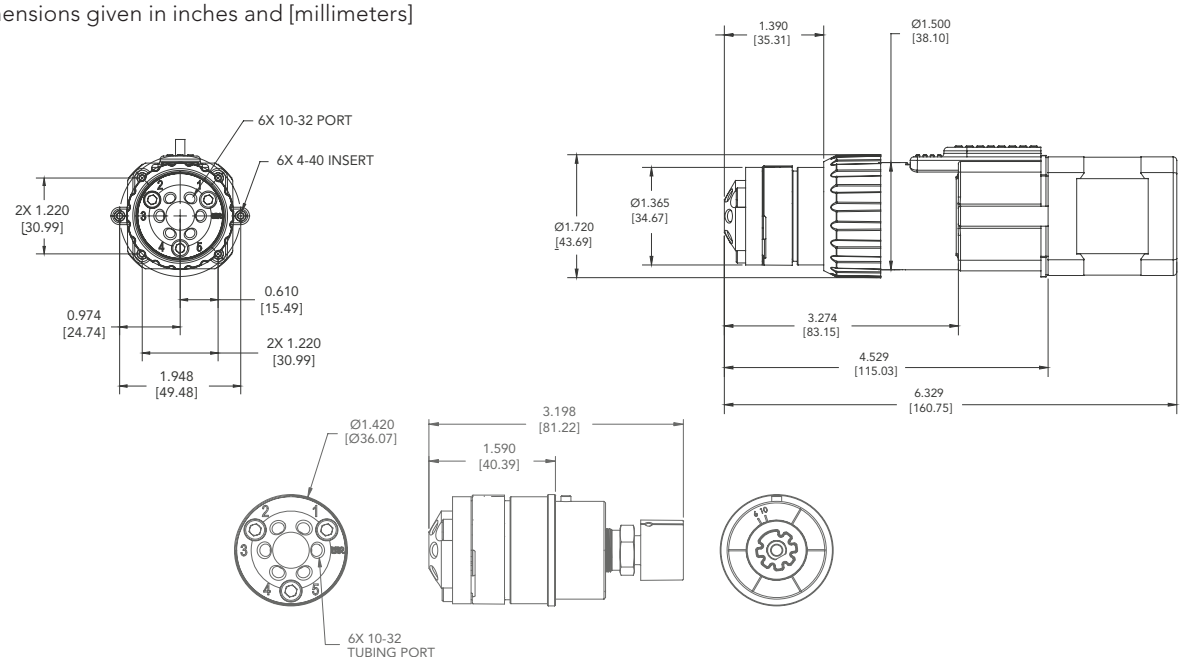

Rapid Replacement Pod™

TitanHT Products

Ultra-High Pressure Valves (15,000 psi)		Optional Driver Board	Rapid Replacement Pods™	
*HT715-000	2-Position, 6-Port Injector, UltraLife™	8382-108	PD715-000	2-Position, 6-Port Injector, UltraLife
HT715-102	2-Position, 10-Port Switching Valve, UltraLife	8382-104	PD715-102	2-Position, 10–Port Switching Valve, UltraLife
HT715-105	6-Position, 7-Port Selector, UltraLife	8382-103	PD715-105	6-Position, 7–Port Selector, UltraLife

*Valve containing the Make-Before-Break feature
For additional High Pressure Valve options see the TitanHP Product Sheet

TitanHT™, UltraLife™, and Rapid Replacement Pod™ are trademarks of IDEX Health & Science LLC.
RheBuild®, and Rheodyne® are registered trademarks of IDEX Health & Science LLC.
©2010 IDEX Health & Science LLC

R3/IDX1036/02.10

IDEX Health & Science LLC
www.idex-hs.com
North/South America +1 866 339 4653 | Europe +49 1801 808 800 | Asia +86 10 6566 9090